Design of a 3-phase 400 Hz Output Power Converter

By
Royalty Holyworth Chihava

Submitted to the Department of Electrical Engineering, Electronics, Computers and Systems
In partial fulfillment of the requirements for the degree of
Master in Electrical Energy Conversion and Power Systems
at the
UNIVERSIDAD DE OVIEDO
September 2024
© Universidad de Oviedo 2015. All rights reserved.

Author……...
Royalty Holyworth Chihava

Certified by……..…….
Juan Manuel Guerrero
Full Professor
Carlos Rivas Pereda
Doctor
Thesis Supervisors

Design of a 3-phase 400 Hz Output Converter

By
Royalty Holyworth Chihava

Submitted to the Department of Electrical Engineering, Electronics, Computers and Systems
On September 26, 2024, in partial fulfillment of the requirements for the degree of
Master of Science in Electrical Energy Conversion and Power Systems

Abstract

The design and analysis of high-frequency power converters play a crucial role in modern power systems, particularly in applications requiring precise voltage control and high- power quality. This thesis focuses on the development of a 400 Hz output converter based on a cascaded 5-level H-bridge topology, incorporating advanced control strategies for optimal performance.

The motivation behind this thesis is to address the growing demand for high-quality power conversion in specialized applications such as aerospace, marine systems, and military equipment, where 400 Hz power is commonly used. By improving the design and control of these converters, we aim to enhance power quality, efficiency, and reliability in critical systems.

The first step of this research involves the design of the converter topology and its control system. We implement a cascaded 5-level H-bridge converter with a sophisticated control strategy utilizing cascaded Proportional-Resonant (PR) controllers. This includes an outer voltage controller resonant at 400 Hz and an inner current controller with multiple resonance points to suppress low-order harmonics.

The second step covers the optimization of controller parameters and system components. Using root locus and Bode plot analyses, the controller gains are tuned well to achieve optimal performance. Additionally, the unipolar phase-shifted PWM scheme, transformer, and LC filter was designed to complement the control system in achieving high-quality output voltage.

The third step involves comprehensive performance evaluation of the designed system. We conduct rigorous testing under various load conditions, including linear, non-linear, and unbalanced three-phase loads. The system's behaviour is initially analysed in the continuous (s-domain) time representation to ensure robust performance across different operating scenarios.

Finally, the fourth and last step focuses on considerations for practical implementation. We size the DC link capacitors based on voltage ripple requirements. Building on the s-domain analysis, we develop a comprehensive digital simulation that incorporates real-world effects. This includes converting the controllers to the z-domain and introducing delays to simulate digital signal processing and digital PWM for generating gate signals. This step ensures that the theoretical design can be effectively evaluated in a realistic digital environment, providing insights into the potential performance of a practical, high-performance 400 Hz output converter suitable for real-world applications.

Thesis Supervisor: Juan Manuel Guerrero
Title: Full Professor

Thesis Supervisor: Carlos Rivas Pereda
Title: Doctor

Acknowledgements

First and foremost, I am deeply grateful to God, whose guidance and blessings have made this achievement possible. I extend my sincere thanks to my supervisor, Professor Juan Manuel Guerrero, for his invaluable support, expertise, and encouragement throughout this project.

I would also like to express my heartfelt gratitude to my family and friends for their unwavering support, patience, and encouragement during this journey. Your belief in me has been a source of strength and motivation every step of the way.

Table of Contents

Abstract 3
Acknowledgements 5
List of Figures 8
List of Tables 10
Acronyms 11
Chapter One 13
1. Introduction 13
1.1 Background 13
1.2 Motivation 15
1.3 Objectives 17
1.4 Thesis Structure 18
Chapter Two 19
2. The State of Art 19
2.1 Design Standards for 400 Hz Converters 19
2.2 Challenges in Designing 400 Hz Output Converters 21
2.3 Topologies Proposed to Meet Specifications 22
2.3.1 Neutral Point Clamped Converter (NPC) 22
2.3.2 Active Neutral Point Clamped Converter (ANPC) 23
2.3.3 Hybrid Active Neutral Point Clamped Converter (Hybrid ANPC) 28
2.3.4 Single Half-Bridge (HB) Converter 30
2.3.5 Cascaded Half-Bridge (HB) Converter 35
2.3.6 Matrix Converter 36
2.4 Control and Filtering for Converter Design 40
2.4.1 Proportional-Resonant (PR) controller 40
2.4.3 Control Strategy: Cascaded Control System 43
Chapter Three 47
3. Proposed System Configuration and Control Design 47
3.1 Proposed System Configuration 47
3.1.1 Cascaded 5-Level H-Bridge Converter Topology: 48
3.1.2 Transformer Integration for Isolation and Current Stress Reduction: 48
3.1.3 Transformer Turns Ratio and Modulation Index: 48

3.1.4 LC Filter Design and Voltage Profile: 49
3.1.5 Modulation Technique – Phase-Shifted PWM (PSPWM): 49
3.1.6 Overall System Benefits: 49
3.2 Design of the Controller In the S-domain 50
3.3 Design of the Controller in the Z-domain 64
Chapter Four 67
4. Simulation Results 67
4.1 S and Z Domain Simulation Results 67
4.2 Sizing of Dc-link Capacitor 75
Chapter Five 76
5. Conclusion and Future Work 76
5.1 Conclusion 76
5.2 Future Work 77
References 79

List of Figures

Figure 1: Three level NPC converter [10]. 23
Figure 2: Main circuit topology of 3L-ANPC VSC [13]. 24
Figure 3: Commutations of the positive rail in the 3L-ANPC VSC (iph > 0): (a) Type 1(+↔0U2), (b) Type 2(+↔0L2), (c) Type 3(+↔0L1) [8]. 26
Figure 4: SV diagram for a three-level NPC converter and the NP current [8]. 28
Figure 5: Summary of typical Si and SiC devices' price on Digikey.ca (TO-220 package or TO-247 Package). (a) Active switches. (b) Diodes [22]. 29
Figure 6: The one-phase circuit topology of the 3L hybrid ANPC converter [22]. 29
Figure 7: Standalone power frequency inverter with an LC filter [26]. 31
Figure 8: Voltage control methods of standalone inverter, (a) Single-loop voltage control (direct method), (b) Double-loops voltage control (cascade method) [26]. 31
Figure 9: Block diagram of the closed loop circuit of the single-loop output voltage control system [26]. 34
Figure 10: The cascaded single-phase inverter topology [30]. 36
Figure 11: Four-Leg indirect Matrix Converter [33]. 37
Figure 12: Nine Switching combinations for the Rectifier Stage [33]. 38
Figure 13: (a) $\alpha\beta y$ 3D Vector Distribution, (b) Three-dimentional map of prisms in $\alpha\beta y$ [33] 39
Figure 14: Three-phase VSI with a passive LC filter. (a) Circuit configuration. (b) Per phase block diagram representation [49]. 44
Figure 15: Bode plot of a VSI with an LC filter: capacitor current feedback (—); inductor current feedback (*) [49]. 45
Figure 16: The proposed system configuration. 47
Figure 17: Output Voltage of a 5-Level Cascaded H-bridge. 50
Figure 18: Fourier series analysis of output voltage of a 5-level CHB. 51
Figure 19: Cascade control loop with outer PR and inner PR controllers. 52
Figure 20: Cascade control loop with outer PR and inner P controllers. 52
Figure 21: Bode plots of non-linear exponential delay versus different padé approximations. 53
Figure 22: Bode plot of the inner current open-loop transfer function with a P controller. 54
Figure 23: Frequency response of the overall open-loop control system with only the proportional terms of the outer and inner PR controllers. 55
Figure 24: Bode plot of the inner current open-loop transfer function with a PR controller. 56
Figure 25: Root locus plot of the inner current closed-loop transfer function with a PR controller. 57
Figure 26: Root locus plot of the inner current closed-loop transfer function with a P controller. 57
Figure 27: Frequency response of the overall open-loop control system with both the proportional and resonant terms of the outer and inner PR controllers. 59
Figure 28: Closed-loop frequency response of the whole system with the outer and inner PR controllers. 60

Figure 29: Comparison of closed-loop system with an inner P-controller instead of an inner PR-controller. 61
Figure 30: Root locus plot of the outer voltage closed-loop transfer function with 2 PR controllers (outer and inner). 61
Figure 31: Root locus plot of the outer voltage closed-loop transfer function with an outer PR controller and an inner P controller. 62
Figure 32: Sinusoidal input response of the closed-loop control system. 63
Figure 33: Frequency response plot of the outer voltage controller transfer function in s-domain vs in z-domain. 65
Figure 34: Frequency response plot of the inner current controller transfer function in s- domain vs in z-domain. 65
Figure 35: Control system open-loop transfer function in s-domain vs in z-domain. 66
Figure 36: Control system closed-loop transfer function: s-domain vs z-domain. 66
Figure 37: Phase-A continuous time Controller input reference voltage compared with output measured load voltage at PF = 1. 68
Figure 38: Phase-A discrete time Controller input reference voltage compared with output measured load voltage at PF = 1. 68
Figure 39: Output Voltage at PF of 1 using s-domain controllers. 69
Figure 40: Output Voltage at PF of 1 using z-domain controllers. 70
Figure 41: Continuous time Phase shifted PWM. 71
Figure 42: Digital Phase shifted PWM. 71
Figure 43: Input power, Output power and efficiency at a PF = 1 and load rating of 100KVA. 72

List of Tables

Table 1: Characteristics of Shipboard Electric Power Systems (Derived from MIL-STD-1399(Navy) Section 300B) [3]. 20
Table 2: Switching States and Phase a Voltage [10] 23
Table 3: Switch States of 3L-ANPC VSC [8]..... 25
Table 4: Devices switching losses distribution for positive current in the three-level ANPC converter [8]. 27
Table 5: Switching States of the 3L-Hybrid ANPC Converter [22]. 30
Table 6: Summary of the advantages and disadvantages of each converter topology. 40
Table 7: Outer and inner PR controller gain values..... 62
Table 8: Output voltage for inductive linear loads at a rating of 100KVA using s-domain controllers..... 72
Table 9: Output voltage for inductive linear loads at a rating of 100KVA using z-domain controllers..... 72
Table 10: Output Voltage for Unbalanced Loads using s-domain controllers. 73
Table 11: Output Voltage for Unbalanced Loads using z-domain controllers, ... 73
Table 12: Output voltage for non-linear loads at different power rating using s-domain controllers. 74
Table 13: Output voltage for non-linear loads at different power rating using z-domain controllers. 74
Table 14: Voltage variations of DC-link Capacitor for different inductive linear loads at a rating of 100KVA. 75

Acronyms

AEA - All-Electric Aircraft

ANPC - Active Neutral Point Clamped Converter

APU - Auxiliary Power Units

CBPWM - Carrier-Based Pulse Width Modulation

CHB - Cascaded Half-Bridge Converter

DVR - Dynamic Voltage Restorer

DSP - Digital Signal Processor

EMI - Electromagnetic Interference

GaN - Gallium Nitride

HB - Half-Bridge

IGBT - Insulated-Gate Bipolar Transistor

LC - Inductor-Capacitor (filter)

MC - Matrix Converter

MEA - More Electric Aircraft

MOSFET - Metal-Oxide-Semiconductor Field-Effect Transistor

MTBF - Mean Time Between Failure

NP - Neutral Point

NPC - Neutral Point Clamped (Converter)

NTSVPWM - Nearest Three Space Vector Pulse Width Modulation

PR - Proportional-Resonant

PWM - Pulse Width Modulation

RC - Repetitive Controller

Si - Silicon

SiC - Silicon Carbide

SPWM - Sinusoidal Pulse Width Modulation

SV - Space Vector

SVM - Space Vector Modulation

SVPWM - Space Vector Pulse Width Modulation

THD - Total Harmonic Distortion

UPS - Uninterruptible Power Supply

VSC - Voltage Source Converter

VSI - Voltage Source Inverter

VSVPWM - Virtual Space Vector Pulse Width Modulation

Chapter One

1. Introduction

1.1 Background

The evolution of power electronics has played a pivotal role in shaping modern electrical systems, particularly in specialized sectors where high-frequency power is essential. Among these, the aerospace industry stands out as a primary driver for innovation in 400 Hz power systems. Aircraft electrical systems have long relied on 400 Hz power, a standard that dates back to the 1930s when it was discovered that this frequency allows for significant reductions in the size and weight of transformers, motors, and other electrical components. In an industry where every kilogram matters, the weight savings offered by 400 Hz systems translate directly into fuel efficiency, increased payload capacity, and improved overall performance of aircraft.

The motivation for continued research and development in 400 Hz power conversion stems from several critical factors. First and foremost is the ever-increasing demand for electrical power in modern aircraft. As aviation technology advances, there is a growing trend towards more electric aircraft (MEA) and all-electric aircraft (AEA) concepts. These designs aim to replace traditional hydraulic and pneumatic systems with electrical alternatives, promising improved efficiency, reduced maintenance requirements, and enhanced reliability. However, this shift places greater demands on the aircraft's electrical system, necessitating more advanced, efficient, and reliable power conversion solutions.

Moreover, the quality of power in aerospace applications is paramount. Sensitive avionics, flight control systems, and navigation equipment require clean, stable power to function reliably. Traditional power conversion methods often struggle to maintain high power quality under varying load conditions, particularly when dealing with non-linear loads that are increasingly common in modern aircraft. The presence of harmonics, voltage fluctuations, and other power quality issues can lead to equipment malfunction, reduced efficiency, and in extreme cases, compromise flight safety. This critical need for high-quality power drives the search for innovative converter topologies and control strategies capable of delivering pristine 400 Hz output across a wide range of operational scenarios.

Another significant motivator for advanced 400 Hz converter research is the push for greater energy efficiency in aviation. With growing concerns about environmental impact and rising fuel costs, airlines and aircraft manufacturers are under pressure to reduce fuel consumption and emissions. More efficient electrical systems, including high-performance 400 Hz converters, contribute directly to these goals by reducing overall aircraft weight and improving the efficiency of power utilization onboard.

This thesis addresses the pressing need for advanced 400 Hz power conversion solutions in aerospace applications. It focuses on developing a high-performance converter capable of delivering clean, stable 400 Hz power while addressing the challenges of weight reduction, efficiency improvement, and power quality enhancement. The research aims to bridge the gap between theoretical advancements in power electronics and practical implementation in aerospace systems, where reliability, robustness, and performance under extreme conditions are non-negotiable requirements.

The undertaken topology in this study is a cascaded 5-level H-bridge converter, a multilevel converter configuration known for its superior harmonic performance and scalability. This topology offers several advantages over traditional two-level converters, including reduced harmonic distortion, lower switching losses, and the ability to handle higher voltage levels without the need for series-connected switching devices. The choice of a multilevel topology is motivated by its potential to significantly improve output waveform quality, a critical factor in aerospace power systems where stringent power quality standards must be met.

Complementing the advanced converter topology is an advanced control strategy based on cascaded Proportional-Resonant (PR) controllers. This control approach is designed to address one of the fundamental challenges in 400 Hz power conversion: the suppression of low-order harmonics while maintaining excellent dynamic response. The outer voltage control loop, tuned to the fundamental frequency of 400 Hz, works in tandem with an inner current control loop featuring multiple resonance points. This structure allows for precise tracking of the reference voltage while actively suppressing specific harmonic components, particularly the 3rd, 5th, and 7th harmonics that are often problematic in aircraft electrical systems.

The integration of the multilevel converter topology with the advanced PR control strategy represents a holistic approach to 400 Hz power conversion. This combination aims to achieve superior performance in terms of output voltage quality, dynamic response to load changes, and overall system efficiency. By addressing both the power stage design and the control aspects, the proposed system seeks to offer a comprehensive solution to the challenges faced in modern aerospace electrical systems.

In summary, this thesis is driven by the critical need for advanced 400 Hz power conversion in aerospace applications, where the demands for lightweight, efficient, and high-quality electrical systems continue to grow. Through the development of a cascaded 5- level H-bridge converter with innovative control strategies, this research aims to contribute significantly to the field of high-frequency power electronics, potentially paving the way for more electric aircraft designs and enhancing the overall performance and reliability of aircraft electrical systems.

1.2 Motivation

The rapid evolution of power electronics has revolutionized modern electrical systems, presenting both challenges and opportunities in power conversion technology. At the forefront of this advancement is the design and implementation of high-frequency power converters, particularly those operating at 400 Hz. These converters play a crucial role in aerospace, maritime, military, and specialized industrial applications, where the demand for efficient, compact, and reliable power systems continues to grow. This thesis focuses on the design of a 400 Hz output converter, driven by several key motivations that underscore the significance of this research.

Firstly, the aerospace and maritime industries face an ongoing challenge to reduce the size and weight of onboard electrical systems without compromising performance. Aircraft electrical systems typically operate at 400 Hz, as this frequency allows for significantly smaller and lighter transformers and motors compared to standard 50/60 Hz systems. For instance, a 400 Hz transformer can be up to 80% lighter than its 60 Hz counterpart for the same power rating. Similarly, modern naval vessels, especially those with electric propulsion systems, benefit from high-frequency power distribution to optimize space utilization. By focusing on a 400 Hz output converter, this research directly contributes to these weight and space reduction efforts, potentially leading to substantial fuel savings and increased payload capacity in both aircraft and ships.

Secondly, the increasing complexity of electrical loads in these applications presents significant challenges to power quality. Non-linear loads, such as advanced avionics, radar systems, and sophisticated weapon systems, introduce harmonics into the power system. These harmonics can lead to increased losses, overheating, and potential damage to sensitive equipment. Current 400 Hz converters often struggle to maintain power quality across varying load conditions, with total harmonic distortion (THD) sometimes exceeding 5% in challenging scenarios. This research aims to address this gap by implementing a sophisticated control strategy combining cascaded Proportional-Resonant (PR) controllers with harmonic suppression capabilities. The goal is to reduce THD to below 3% across a wide range of load conditions, thereby enhancing the reliability and longevity of critical systems.

Furthermore, the adoption of multilevel converter topologies, specifically the cascaded 5-level H-bridge converter in this study, is motivated by the need for higher power handling capabilities and improved output waveform quality. This is particularly relevant for large naval vessels with electric propulsion systems, where power requirements can exceed 100 MW, and for next-generation aircraft with increasing electrical power demands. Multilevel converters offer advantages such as reduced harmonic distortion, lower switching losses, and the ability to operate at higher voltage levels compared to traditional two-level converters. This research aims to demonstrate how such topologies can improve overall system efficiency by 2-3% compared to conventional designs, a significant figure in high- power applications.

The comprehensive approach taken in this research, which includes theoretical design, simulation, and practical considerations such as DC link capacitor sizing, is motivated by the need to bridge the gap between academic research and industrial application. By addressing the critical aspect of capacitor sizing, this study aims to provide valuable insights for the practical implementation of high-frequency converters in real-world scenarios. This is particularly crucial in aerospace and maritime applications, where reliability under harsh environmental conditions is paramount. The focus on capacitance sizing contributes to the overall understanding of converter design, while leaving room for future work on other components such as switches and thermal management systems.

Moreover, this research aligns with the broader trend of electrification in transportation and industrial sectors. While focusing on 400 Hz systems, the principles and methodologies developed here can potentially be adapted to other frequency ranges and applications. As industries move towards more electrified solutions to reduce carbon emissions and increase efficiency, the need for flexible and high-performance power converters becomes increasingly important. This study contributes to this global effort by potentially reducing the carbon footprint of aerospace and maritime operations through improved electrical system efficiency.

Additionally, the motivation behind this research is driven by the continuous pursuit of technological advancement in power electronics. As new semiconductor materials like Silicon Carbide (SiC) and Gallium Nitride (GaN) emerge, enabling higher switching frequencies and improved efficiency, the design methodologies for high-frequency converters must evolve. This thesis aims to establish a foundation for future research incorporating these cutting-edge technologies, potentially leading to even more compact and efficient 400 Hz power systems.

Lastly, the economic implications of improved 400 Hz converters are significant. More efficient and reliable power systems can lead to reduced operational costs for airlines and shipping companies. While quantifying these savings is challenging due to the complex nature of operations, industry reports suggest that even a 1% improvement in overall electrical system efficiency can translate to millions of dollars in annual fuel savings for large commercial airlines or shipping fleets.

In conclusion, this thesis on the design of a 400 Hz output converter is motivated by the need to address critical challenges in high-frequency power conversion for aerospace, maritime, and related applications. By tackling issues of power quality, system efficiency, and practical implementation, this research aims to contribute significantly to the field of power electronics. The potential outcomes of this study extend beyond academic interest, offering tangible benefits in terms of improved system performance, reduced environmental impact, and economic advantages across multiple industries reliant on high-frequency power systems.

1.3 Objectives

The central theme of the thesis is the design, analysis, and implementation of a high-performance 400 Hz output converter based on a cascaded 5-level H-bridge topology with advanced control strategies for aerospace and maritime applications. The fundamental objectives guiding the work process can thus be listed as:

1. Analysis of the cascaded 5-level H-bridge converter topology:

- Investigate the advantages and challenges of using a multilevel converter for 400 Hz applications.
- Analyze the harmonic content and power quality implications of the chosen topology.

2. Design of advanced control strategies:

- Develop a cascaded control loop comprising outer voltage and inner current controllers.
- Implement Proportional-Resonant (PR) controllers with specific resonance points for harmonic suppression.
- Optimize controller parameters using root locus and Bode plot analyses for robust performance across various load conditions.

3. Simulations of the complete converter system:

- Model the full system including the cascaded H-bridge, unipolar phase- shifted PWM, transformer, and LC filter.
- Simulate the system performance under different load scenarios (linear, non- linear, and unbalanced three-phase loads).
- Evaluate the system's behavior in both continuous (s-domain) and discrete (z-domain) time representations.

4. Design of an experimental setup for practical implementation:

- Size the DC link capacitors based on voltage ripple requirements. ·
- Design the LC filter for high-order harmonic attenuation. ·
- Develop a digital simulation by converting the controllers into the z-domain.
- Incorporate practical implementation effects, such as:
    - Introducing delays to simulate digital signal processing in real systems.
    - Modelling digital PWM for generating gate signals to the switches.
    - Create a comprehensive digital model of the 400 Hz output converter, integrating the sized capacitors, LC filter, digital controllers, and simulated practical effects.

1.4 Thesis Structure

Towards the previously mentioned objectives, the thesis work was developed, and the structure is organized as follows:

Chapter 1: Introduction

This chapter introduces the motivation for the work carried out in this thesis. It presents the background of 400 Hz power systems, their applications in aerospace and maritime industries, and the need for advanced converter designs. The chapter also outlines the objectives and scope of the research.

Chapter 2: Literature Review

This chapter reviews the research literature that provides a foundation for the work carried out in this thesis. It covers existing topologies for 400 Hz converters, control strategies for multilevel converters, and current challenges in high-frequency power conversion. This review establishes the context for the proposed system and highlights the gaps this research aims to address.

Chapter 3: Proposed System Configuration and Control Structure

This chapter describes the proposed cascaded 5-level H-bridge converter topology for 400 Hz output, detailing the system architecture and its advantages. It then presents the design of the control system, focusing on the cascaded control loop with Proportional-Resonant (PR) controllers. The chapter covers the power stage, modulation technique, filter design, and controller tuning process using root locus and Bode plot analyses. It demonstrates how the integration of the multilevel topology and advanced control strategies achieves high-quality output for aerospace and maritime applications.

Chapter 4: Simulation Studies and Results

This chapter covers the comprehensive simulation studies conducted to validate the proposed system design. It presents the results of system performance under various load conditions, including linear, non-linear, and unbalanced loads. The chapter also includes analyses in both continuous and discrete time domains, demonstrating the robustness of the control system.

Chapter 5: Conclusions and Future Work

This chapter summarizes the key findings and contributions of the thesis. It discusses how the objectives were met and the significance of the results. The chapter also outlines potential areas for future research, including possible extensions of the work and its applications in emerging fields of power electronics.

Chapter Two

2. The State of Art

In various specialized applications such as naval and aerospace systems, 400 Hz power supply systems are utilized for their unique advantages. Unlike conventional 50 Hz or 60 Hz power grids, 400 Hz systems offer several benefits in terms of size, weight, and efficiency, which are critical factors in these environments. Specifically, the use of 400 Hz converters allows for the design of smaller and lighter electrical equipment, making them ideal for applications where space and weight are at a premium, such as in aircraft, naval vessels, and submarines. The higher frequency reduces the size of transformers, motors, and other related equipment, leading to significant savings in weight and space, which is particularly crucial in military and aerospace contexts [1].

In aerospace, 400 Hz converters are essential for powering avionics, flight control systems, and other onboard electronics that require a stable and reliable power source. Similarly, naval vessels, particularly submarines, benefit from 400 Hz converters to power various systems, including navigation, communication, and control systems. The choice of this frequency also stems from its ability to enhance the efficiency of power distribution, minimize harmonic distortions, and ensure better voltage regulation, which are all critical factors in mission-critical operations [2].

Thus, 400 Hz converters are central to ensuring the operational efficiency and reliability of both naval and aerospace power systems, contributing to the overall performance and safety of these complex environments.

2.1 Design Standards for 400 Hz Converters

When designing converters for 400 Hz systems, particularly in military and naval applications, compliance with established standards is critical to ensure safety, reliability, and interoperability. One of the key standards governing the design of these converters is the MIL-STD-1399 (Navy) Section 300B. This standard, issued by the Department of Defense, outlines the interface requirements for alternating current (AC) electric power systems onboard naval vessels, ensuring that all equipment connected to the ship's power supply operates effectively under the prescribed conditions.

MIL-STD-1399(Navy) Section 300B specifies a range of electrical characteristics that must be adhered to when designing and operating equipment in naval power systems. These include regulations for frequency tolerance, voltage modulation, and harmonic distortion, among other critical parameters. The standard helps to ensure compatibility between various electrical

systems onboard, preventing malfunctions that could arise due to incompatible power characteristics.

The table below outlines the key characteristics of different shipboard electric power systems based on this standard, including the nominal frequency, voltage unbalance limits, and waveform distortion requirements [3]:

Table 1: Characteristics of Shipboard Electric Power Systems (Derived from MIL-STD-1399(Navy) Section 300B) [3].

Characteristics	**Type I**	**Type II**	**Type III**
Frequency			
1. Nominal frequency	60 Hz	400 Hz	400 Hz
2. Frequency tolerance	±3% (±5% for submarines)	±5%	±0.5%
3. Frequency modulation	0.5%	0.5%	0.5%
4. Frequency transient tolerance	±4%	±4%	±1%
Voltage			
5. Nominal user voltage	440, 115, 115/200 Vrms	440, 115 Vrms	440, 115, 115/200 Vrms
6. Line-to-line voltage unbalance	3% (0.5% for 440 Vrms, 1% for 115 Vrms for submarines)	3%	2%
7. User voltage tolerance			
a. Average line-to-line voltage from nominal	±5%	±5%	±2%
b. Line-to-line voltage from nominal, including items 6 and 7.a	±7%	±7%	±3%
8. Voltage modulation	2%	2%	1%
9. Voltage transient tolerance	±16%	±16%	±5%
Waveform (voltage)			
10. Maximum total harmonic distortion	5%	5%	3%
11. Maximum single harmonic	3%	3%	2%
12. Maximum deviation factor	5% (3% for submarines)	5%	5%

2.2 Challenges in Designing 400 Hz Output Converters

Designing 400 Hz output converters for naval and aerospace applications presents several engineering challenges. These challenges stem from the stringent requirements for power quality, reliability, and efficiency, alongside the operational constraints such as size, weight, and environmental factors.

One of the main challenges is managing high-frequency switching losses. At higher frequencies like 400 Hz, converters experience increased losses due to switching events in semiconductors, which can lead to overheating and reduced efficiency. To mitigate this, advanced power semiconductor devices like Sic (Silicon Carbide) and GaN (Gallium Nitride) are often used, as they offer higher thermal conductivity and switching capabilities than traditional silicon-based devices [4].

Another significant challenge is thermal management. In the compact environments of aircraft or naval vessels, dissipating heat effectively is critical. High-power-density converters generate substantial amounts of heat, and without effective cooling solutions, this can lead to component failure or reduced lifespan. Engineers need to design sophisticated thermal management systems, such as liquid cooling or advanced heat sinks, to ensure the converter can operate safely within the tight thermal constraints [5].

Additionally, EMI (Electromagnetic Interference) mitigation is another complex issue. 400 Hz systems can generate higher levels of EMI, which can interfere with sensitive onboard electronics such as navigation or communication systems. Designers must incorporate robust EMI filtering and shielding solutions for controlling EMI emissions and ensuring compatibility with other onboard systems [6].

Furthermore, voltage regulation and harmonic distortion pose challenges in environments where power quality is crucial. Achieving stable output voltage with minimal harmonics is essential for the safe operation of sensitive equipment. The high-speed switching in converters can introduce significant harmonic distortion, which must be minimized through the use of advanced control strategies and filter designs [7].

Finally, ruggedness and durability are crucial in naval and aerospace environments where systems are exposed to extreme conditions such as high humidity, vibrations, and wide temperature ranges. The converters must be robust enough to withstand these harsh conditions without performance degradation over time.

2.3 Topologies Proposed to Meet Specifications

In the following section, we introduce several power converter topologies that have been proposed to meet the required specifications. Each topology offers specific advantages and disadvantages depending on the application, particularly in terms of size, complexity, and switching losses.

2.3.1 Neutral Point Clamped Converter (NPC)

The Neutral-Point Clamped (NPC) converter is one of the most common and widely used topologies in multilevel converter designs, particularly in high-power applications. Introduced in 1981 by Nabae, Takahashi, and Akagi, the NPC converter, also known as the diode-clamped converter, provides a robust solution for reducing switching losses while maintaining high-quality output. By utilizing clamping diodes, the NPC converter splits the DC bus into multiple voltage levels, enabling smoother voltage waveforms and reduced harmonic distortion. The multilevel approach allows the use of lower-rated switches for high-voltage applications, which reduces overall switching stress and enhances reliability [8].

In NPC converters, the most common pulse-width modulation (PWM) technique used is space vector PWM (SVPWM), which optimizes switching performance by regulating the switching sequences of the converter's base space vectors. This technique, combined with the NPC topology, makes it suitable for various applications, including active rectifiers and inverters, where efficiency and harmonic reduction are crucial [9].

Switching States and Operation

The NPC converter, depicted in Figure 1, operates through three distinct switching states: P (positive), O (neutral), and N (negative), as shown in Table 2. Each phase leg consists of four active switches and clamping diodes that control the voltage output. The NPC converter connects the load to three voltage levels: $+U_{dc}$, 0, and $-U_{dc}$, depending on the switching state of the semiconductor modules [10].

- State P: The load is connected to the positive DC bus ($+U_{dc}$), resulting in a positive output voltage.
- State O: The load is connected to the neutral point (0), producing a zero-voltage output. This state can be achieved using two redundant configurations.
- State N: The load is connected to the negative DC bus ($-U_{dc}$), resulting in a negative output voltage [10].

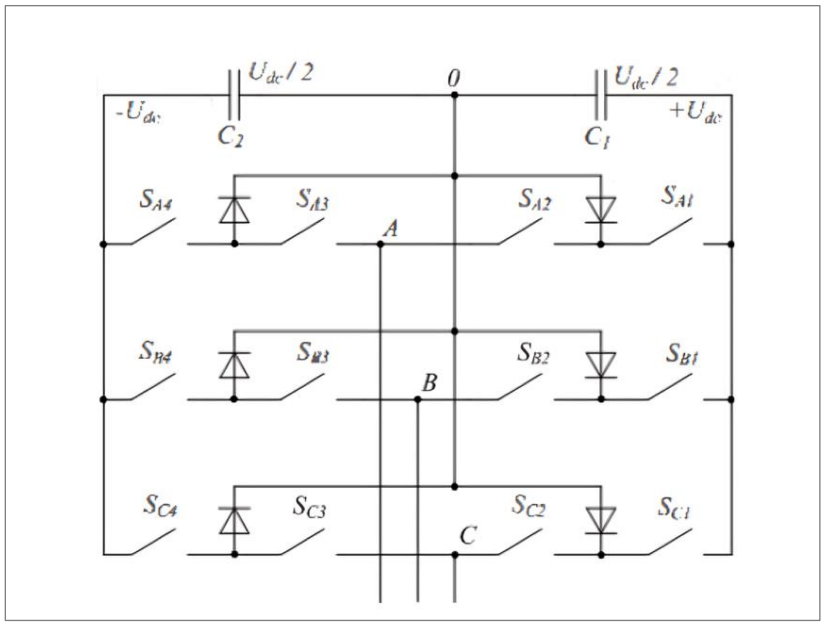

Figure 1: Three level NPC converter [10].

Table 2: Switching States and Phase a Voltage [10] .

Device Switching Status of Leg Phase A			
S_{A1}	on	off	off
S_{A2}	on	on	off
S_{A3}	off	on	on
S_{A4}	off	off	on
Magnitude Voltage	$+U_{dc}/2$	0	$-U_{dc}/2$
Switching State	P	O	N

In each leg, only two switches are turned on at any given time, controlling the current flow through the clamping diodes to provide the desired voltage output. By carefully selecting the switching sequences for each phase, the converter generates a three-level output with reduced harmonic content and improved power quality. The NPC converter's ability to control high-voltage levels with lower-rated devices makes it a highly efficient and cost-effective solution for many industrial applications.

2.3.2 Active Neutral Point Clamped Converter (ANPC)

The three-level Neutral Point Clamped Voltage Source Converter (3L-NPC VSC) has become a key component in high-voltage and high-power applications, thanks to its efficient utilization of power electronics. One of the primary advantages of the 3L-NPC VSC is its superior output voltage quality compared to traditional two-level converters. However, this converter has certain limitations, one of which is the unequal distribution of semiconductor losses among the devices.

The device experiencing the highest losses becomes a limiting factor, restricting both the switching frequency and the output power of the converter [11].

Another drawback is the oscillation of the DC-link capacitor voltages; at a frequency three times that of the fundamental output voltage; which increases the voltage stress on the devices, causing low-order harmonics to appear in the output voltage.

To address these issues, the three-level Active Neutral Point Clamped Voltage Source Converter (3L-ANPC VSC) was introduced [12]. This topology was specifically designed to overcome the unequal loss distribution and junction temperature issues associated with the conventional 3L-NPC VSC. The 3L-ANPC VSC adds additional active switches in parallel to the NPC diodes, while maintaining the overall structure of the NPC VSC, as shown in Figure 2 [13].

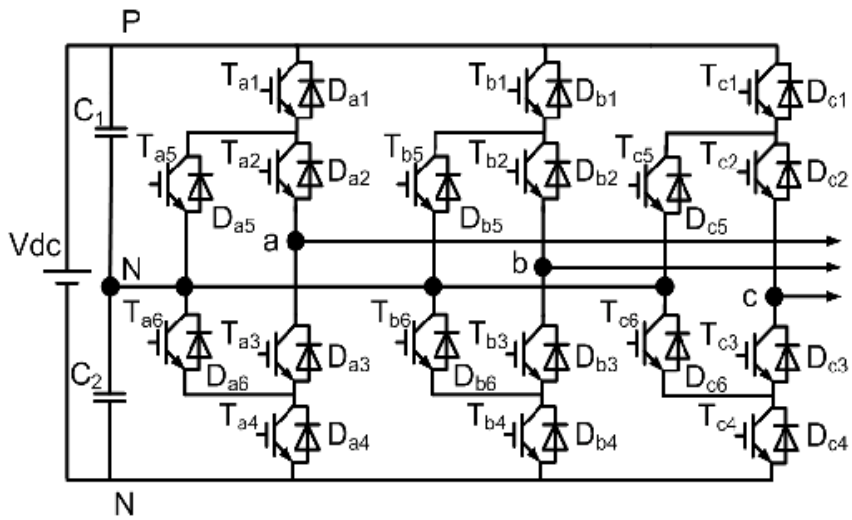

Figure 2: Main circuit topology of 3L-ANPC VSC [13].

The 3L-ANPC VSC offers three additional switching states and increases the number of commutations by a factor of four compared to the conventional 3L-NPC VSC. However, existing Pulse Width Modulation (PWM) strategies for the 3L-ANPC do not fully balance the losses across the 18 switches. To optimize the performance and ensure equal distribution of semiconductor losses, it is necessary to implement more advanced loss-balancing strategies [14].

Several modulation techniques have been proposed for use in the ANPC converter, which can generally be categorized into two types based on PWM modulation strategies. The first type is space vector pulse width modulation (SVPWM), which includes Nearest Three Space Vector Pulse Width Modulation (NTSVPWM) and Virtual Space Vector Pulse Width Modulation (VSVPWM). The second type is sinusoidal carrier-based PWM (CBPWM), which involves injecting a zero-frequency voltage into the reference waveform [15].

The duty ratio of the small vectors in NTSVPWM can help balance the neutral point (NP) voltage in the ANPC converter. However, both NTSVPWM and Sinusoidal Pulse Width

Modulation (SPWM) only eliminate NP voltage ripple within specific ranges of load power angle and modulation index. Outside these "zero-ripple" regions, low-frequency oscillations of the NP voltage can occur, particularly at high modulation indices and low power factors. Selecting between CBPWM and NTSVPWM strategies can help mitigate these oscillations to some extent.

In contrast, Virtual Space Vector Pulse Width Modulation (VSVPWM) can control the DC-link capacitor voltage balance for any load or modulation index, as long as the sum of the output three-phase currents is zero. While VSVPWM achieves better voltage balancing, it also increases the switching frequency and the total harmonic distortion (THD) of the phase voltage [16], [17]

2.3.2.1 Operating Principle of 3L-ANPC Converter

Taking a single-phase leg of the 3L-ANPC Voltage Source Converter (VSC) as an example, the switch states can be categorized as shown in Table 3. In this topology, there are four zero-voltage states: 0U1, 0U2, 0L1, and 0L2. When the phase current flows through the upper half of the neutral point, the relevant switching states are 0U1 and 0U2, in which switches T_{a2} and T_{a5} are activated. The distinction between these two states lies in the activation of T_{a4} during the 0U1 state, which alters the distribution of switching losses. Although the conduction paths for 0U1 and 0U2 are identical, turning on T_{a4} in the 0U1 state leads to a different loss distribution.

Similarly, in the lower zero states (0L1 and 0L2), the loss distribution is impacted by turning on T_{a1}. In the event that T_{a1}, T_{a2}, and T_{a6} are turned on, the phase voltage reaches Vdc/2. The role of T_{a6} is to ensure balanced voltage sharing between T_{a3} and T_{a4}. Conversely, during the negative voltage state, switches T_{a3}, T_{a4}, and T_{a5} are activated, yielding a phase voltage of -Vdc/2. In this scenario, T_{a5} is essential for balancing the voltage across T_{a1} and T_{a2} [8].

Table 3: Switch States of 3L-ANPC VSC [8].

State	T_{a1}	T_{a2}	T_{a3}	T_{a4}	T_{a5}	T_{a6}	V_{aN}
+	1	1	0	0	0	1	Vdc/2
0U2	0	1	0	0	1	0	0
0U1	0	1	0	1	1	0	0
0L1	1	0	1	0	0	1	0
0L2	0	0	1	0	0	1	0
-	0	0	1	1	1	0	-Vdc/2

2.3.2.2 Commutation Types and Loss Distribution

The commutation process between these zero states plays a pivotal role in the distribution of switching losses across the converter's devices. Three distinct commutation types are identified: Type 1, Type 2, and Type 3. All commutations involve just one active switch and one diode, meaning that these two devices bear the brunt of the switching losses. Figure 3 illustrates the commutation from zero states to the positive voltage state, with a positive phase current ($i_{ph} > 0$). In these figures, the devices experiencing switching losses are highlighted by circles [8].

1. Type 1 Commutation (0U2 ↔ Positive State)

In Figure 3a, T_{a1} turns on and D_{a5} turns off during the commutation from 0U2 to the positive state. Conversely, in the reverse commutation from the positive state to 0U2, T_{a1} turns off while D_{a5} turns on. Consequently, both T_{a1} and D_{a5} experience switching losses in this process. It is important to note that the commutation Positive ↔ 0U1 is not applied, as turning on T_{a4} in this state does not offer significant benefits.

2. Type 2 Commutation (Positive State ↔ 0L2)

Figure 3b illustrates the commutation process between the positive voltage state and 0L2. In this case, switching losses are experienced by T_{a1} and D_{a3} during the transition. This type of commutation involves shifting the current path between the positive DC bus and the lower neutral point, distributing losses across both upper and lower devices.

3. Type 3 Commutation (Positive State ↔ 0L1)

As depicted in Figure 3c, this commutation type involves the switching losses of T_{a2} and D_{a3}. Similar to Type 2, this process transitions between the positive voltage state and 0L1, with a distinct distribution of losses, engaging T_{a2} rather than T_{a1}. This offers an alternative pattern for loss distribution compared to Type 2.

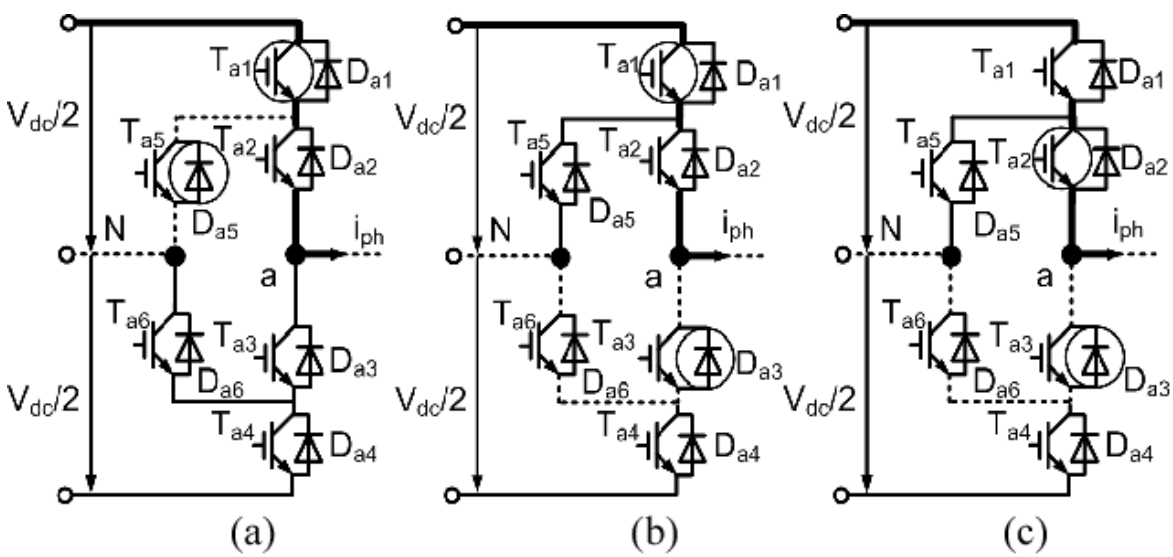

Figure 3: Commutations of the positive rail in the 3L-ANPC VSC (i_{ph} > 0): (a) Type 1(+↔0U2), (b) Type 2(+↔0L2), (c) Type 3(+↔0L1) [8].

The distribution of switching losses for each commutation type is summarized in Table II. The table outlines the devices impacted by switching losses for both positive and negative phase currents. Key observations include:

- All commutations occur between one active switch and one diode, concentrating the main switching losses on these two devices.
- Type 1 primarily affects the upper devices in the converter leg, while Type 2 and Type 3 provide alternative paths for distributing the losses.
- The ability to distribute losses effectively across multiple devices improves the overall efficiency of the converter and reduces thermal stress on individual components.

By employing these different commutation types, the 3L-ANPC VSC achieves a more balanced thermal and electrical load across its switching devices, improving the converter's performance, efficiency, and reliability when compared to traditional multilevel topologies.

Table 4: Devices switching losses distribution for positive current in the three-level ANPC converter [8].

Positive Phase Current							
Type		**T_{a1}**	**T_{a2}**	**D_{a3}**	**D_{a4}**	**D_{a5}**	**T_{a6}**
1	+↔0U2	✓				✓	
3	+↔0L1		✓	✓			
2	+↔0L2	✓		✓			
2	0U2↔-		✓		✓		
3	0U1↔-		✓	✓			
1	0L2↔-				✓		✓
Negative Phase Current							
		Da1	**D_{a2}**	**T_{a3}**	**T_{a4}**	**T_{a5}**	**T_{a6}**
1	+↔0U2	✓				✓	
3	+↔0L1		✓	✓			
2	+↔0L2	✓		✓			
2	0U2↔-		✓		✓		
3	0U1↔-		✓	✓			
1	0L2↔-				✓		✓

2.3.2.3 Neutral Point Voltage Fluctuation in ANPC Converters

The three-level ANPC converter (as illustrated in Figure. 1) presents 27 switching states in the $\alpha\beta$ reference frame. Within this frame, the space-voltage vectors are identified by a two-layer hexagon, centered at the origin of the plane. The switching states correspond to voltage levels −Vdc/2, 0, and Vdc/2 with respect to the neutral point (NP), and are represented by -1, 0, and 1, respectively.

The space vector (SV) diagram for this converter, shown in Figure. 4, reveals the influence of various switching vectors on the NP current. Specifically, non-zero NP currents are produced by medium vectors m_1 to m_6 and small vectors s_1 to s_6, while zero and long vectors do not impact the NP current. The small vectors, which offer redundant switching states, generate the same line-to-line voltage but induce currents in opposite directions through the NP. For instance, the

vector (0, -1, -1) results in a current of I_a flowing into the NP ($I_{np} = I_a$), whereas vector (1, 0, 0) drives the same current in the opposite direction ($I_{np} = -I_a$).

By appropriately selecting the duty cycles of the low small vectors (d_{sl}) and high small vectors (d_{sh}), the balancing of the NP voltage can be achieved [18].

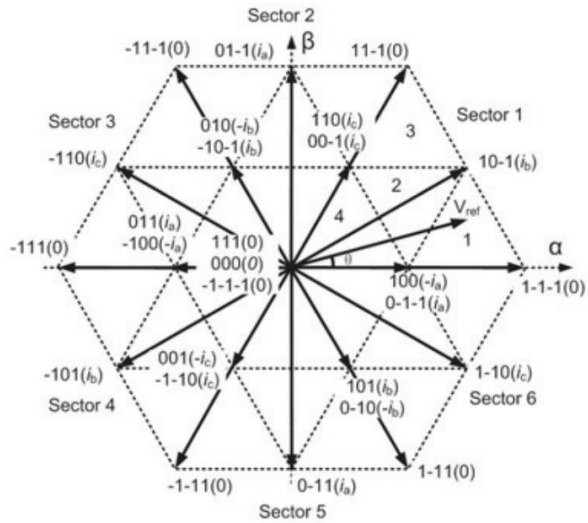

Figure 4: SV diagram for a three-level NPC converter and the NP current [8].

2.3.3 Hybrid Active Neutral Point Clamped Converter (Hybrid ANPC)

Three-level converters are widely recognized for their low switching losses and reduced filter size, making them a popular choice in various high-power applications. To enhance power density, Silicon Carbide (SiC) MOSFETs have increasingly been employed in place of traditional Silicon (Si) Insulated-Gate Bipolar Transistors (IGBTs). While SiC MOSFETs offer superior performance, including higher efficiency and lower switching losses, they come with significantly higher costs compared to Si-based devices.

To address this cost-performance trade-off, hybrid active neutral-point-clamped (ANPC) converters have been proposed, combining both SiC MOSFETs and Si devices. These converters typically feature four Si switches and two SiC MOSFETs, leading to a substantial reduction in total cost compared to converters using all-SiC MOSFETs. Additionally, a specialized modulation scheme allows the shifting of all switching events from the Si devices to the SiC MOSFETs. By leveraging redundant switching states, this approach minimizes switching losses, leading to significantly higher efficiency [19], [20].

The hybrid ANPC converter thus capitalizes on the low-switching-loss advantage of SiC MOSFETs and the cost-effectiveness of Si devices. This combination proves particularly

beneficial in high-end applications such as grid-connected inverters and rectifiers, where high efficiency and lower operational costs are paramount [21].

In Figure 5, it is illustrated that, for high-current applications, the cost of SiC MOSFETs is significantly higher than their silicon-based counterparts [22]. Specifically, the price of a SiC MOSFET is nearly six to eight times that of a Si IGBT and roughly double that of a Si MOSFET. Similarly, SiC diodes are approximately eight times more expensive than Si diodes. Given this substantial cost disparity, a fully SiC MOSFET-based three-level converter is less economically feasible. As a result, the hybrid three-level converter, which combines Si and SiC devices, presents a more attractive and cost-effective solution.

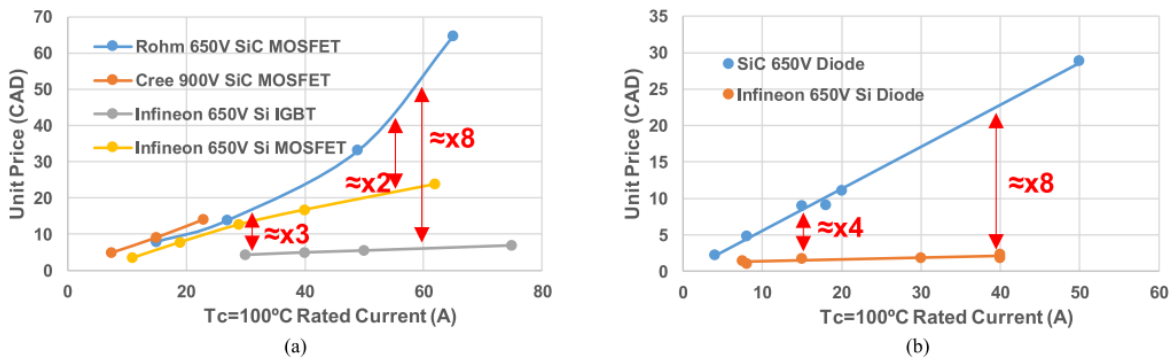

Figure 5: Summary of typical Si and SiC devices' price on Digikey.ca (TO-220 package or TO-247 Package). (a) Active switches. (b) Diodes [22].

The one-phase circuit of the three-level hybrid ANPC converter is depicted in Figure 6. This circuit comprises six active switches, where switches Q_2 and Q_3 are SiC MOSFETs, and the remaining switches are Si-based devices. This configuration leverages the high efficiency of SiC MOSFETs for critical switching tasks while keeping costs lower by using Si switches for less demanding operations.

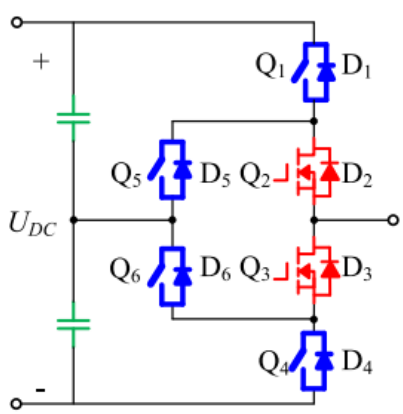

Figure 6: The one-phase circuit topology of the 3L hybrid ANPC converter [22].

The converter operates through four distinct switching states—N, O-, O+, and P—each corresponding to different voltage levels, as shown in Table 5. These states allow the converter to output three distinct voltage levels, with the "0" voltage level having two redundant switching states.

As detailed in Table 5, the ON–OFF configurations of all switching devices are defined for each state. Si-based device pairs, Q_1–Q_6 and Q_5–Q_4, share the same gating signals during operation, ensuring synchronized switching behaviour. These pairs are also switched in a complementary manner. On the other hand, the SiC MOSFETs, Q_2 and Q_3, function as a complementary pair, alternating their states to handle high frequency switching events. This modulation approach efficiently assigns the high-frequency, high-stress switching to the SiC MOSFETs, thereby reducing switching losses while taking advantage of the lower cost of the Si devices for the remaining switching events [22].

Table 5: Switching States of the 3L-Hybrid ANPC Converter [22].

Switch state	**Voltage level**	**Q_1**	**Q_2**	**Q_3**	**Q_4**	**Q_5**	**Q_6**
N	1	0	0	1	1	1	0
O-	0	0	1	0	1	1	0
O+	0	1	0	1	0	0	1
P	-1	1	1	0	0	0	1

2.3.4 Single Half-Bridge (HB) Converter

In various aerospace applications such as helicopters and airplanes, the primary source of electrical power is an electric generator connected to the aircraft's main engine, typically providing a DC voltage of around 28 V. In addition to the main power source, auxiliary power units (APUs), including batteries, are available for emergency situations. Many AC loads in these systems, which generally operate at 400 Hz and 115 V, require frequency converters to adjust the output. These converters are classified into two major categories: dynamic and static. Earlier dynamic converters relied on mechanical components, such as electromagnetic vibrators, for switching operations. However, modern static converters, also known as frequency inverters, employ semiconductor switches to achieve the required frequency conversion [23].

In the past, there was lack of confidence regarding microcontroller- and digital signal processor (DSP)-based inverters. As a result, analogue electronic circuits and dynamic converters were preferred. However, advancements in power electronics and processing technologies have led to a significant shift towards digital inverters, which are now commonly used in aerospace applications. Today, 400 Hz constant-frequency inverters are widely employed not only in aerospace but also in submarines, rail transport, and testing laboratories [24]. Due to the critical nature of these applications, they must meet strict standards such as MIL-STD 704L, ISO 6858-1982, and BS 2G 219 [3]. The design of 400 Hz inverters is governed by several requirements,

including precise output voltage regulation, minimal voltage Total Harmonic Distortion (THD), and specific switching frequency limits.

The output voltage of Voltage Source Inverters (VSIs) inherently contains harmonic components. According to the standards for 400 Hz inverters and due to the harmful effects of harmonics on navigation and instrumentation systems, reducing harmonic distortion is crucial. To meet this requirement, passive power filters are often employed. Figure 7 illustrates a block diagram of a single-phase inverter equipped with a low-pass filter. The commonly used output filters in VSIs are of three types: L, LC, and LCL. In grid-connected systems where the inverter operates in current control mode, L and LCL filters are typically used. However, in standalone systems, where the inverter operates in voltage control mode, LC filters are preferred [25].

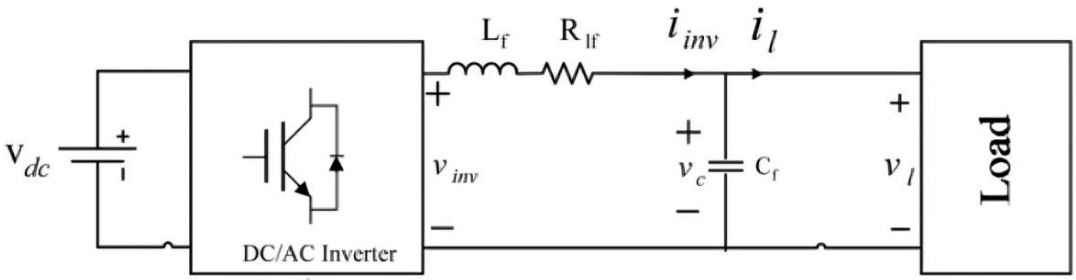

Figure 7: Standalone power frequency inverter with an LC filter [26].

In standalone inverters, load variations and voltage drop across the filter can cause deviations in the output voltage. This poses challenges for applications that require tight voltage regulation. Various voltage control methods have been developed to maintain the desired output performance of the inverter. Broadly speaking, there are two main voltage control topologies: single-loop control (direct method) [27] and double-loop control (cascade method) [28]. Figure 8 illustrates these two control methods. In the double-loop method, the inner loop regulates the inductor current, while the outer loop controls the capacitor or output voltage, ensuring that it tracks the reference value.

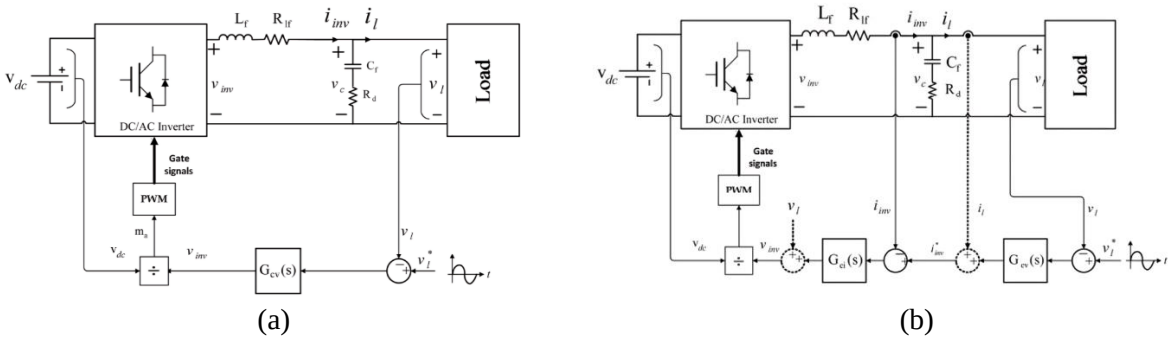

Figure 8: Voltage control methods of standalone inverter, (a) Single-loop voltage control (direct method), (b) Double-loops voltage control (cascade method) [26].

To simplify the system and increase inverter reliability in standalone applications, the single-loop voltage control method is often employed, along with a carefully designed LC filter. This approach reduces computational complexity and provides satisfactory performance in 400 Hz inverter applications.

In the following section, the design of a single-phase 400 Hz inverter with variable input and adjustable output voltages will be introduced. The design aspects of the target inverter include the design of the output filter, and the AC voltage control loop at the output. These components are crucial for ensuring precise control, high efficiency, and compliance with stringent aerospace standards.

2.3.4.1 Design of LC Power Filter

The design of an LC power filter is a crucial component in the development of a 400 Hz inverter, aiming to limit output current ripple and restrict reactive power absorption by the filter capacitor. This process requires several key inverter parameters: output voltage (V_l), output frequency (f_o), nominal power (P_n), switching frequency (f_{sw}), and DC bus voltage (V_{dc}).

The design procedure begins with calculating base values that serve as reference points for component sizing. The base impedance (Z_b), angular frequency (ω_b), inductance (L_b), and capacitance (C_b) are determined using the following equations:

$$Z_b = \frac{{V_l}^2}{P_n} \tag{2.1}$$

$$\omega_b = 2\pi f_o \tag{2.2}$$

$$L_b = \frac{Z_b}{\omega_b} \tag{2.3}$$

$$C_b = \frac{1}{(Z_b * \omega_b)} \tag{2.4}$$

With these base values established, the filter capacitor (C_f) is sized to exchange approximately 5% of the inverter's rated power as reactive power:

$$C_f = 0.05 * C_b \tag{2.5}$$

This sizing helps minimize the reactive power burden on the inverter while still providing adequate filtering.

The filter inductor (L_f) value is determined based on the maximum peak-to-peak current ripple. For a full-bridge, single-phase inverter with unipolar modulation, the current ripple is expressed as:

$$\Delta i_L(\omega t) = \frac{V_{dc}}{2L_f f_{sw}}[1 - m_a \sin(\omega t)] * m_a \sin(\omega t) \tag{2.6}$$

where m_a is the modulation index. The maximum ripple current ($\Delta i_{L,max}$) is limited to 10% of the inverter's nominal current amplitude (I_{max}):

$$\Delta i_{L,max} = \frac{V_{dc}}{8L_f f_{sw}} = 0.1 * I_{max} \tag{2.7}$$

Considering: $$I_{max} = \frac{\sqrt{2}*P_n}{V_l} \tag{2.8}$$

substituting of (2.7) and (2.8) into (2.6) results:

$$L_f = \frac{V_{dc}V_l}{0.8\sqrt{2}*P_n*f_{sw}} \tag{2.9}$$

To ensure the correct design of the filter, several criteria must be met.

First, the resonance frequency (f_{res}) of the LC filter should be between 10 times the output frequency and half the switching frequency:

$$10f_o < f_{res} < 0.5f_{sw} \tag{2.10}$$

This criterion ensures that the filter's resonant frequency is sufficiently separated from both the fundamental frequency and the switching frequency, preventing unwanted interactions.

Second, the voltage drop across the filter inductor should be limited to ensure efficient power transfer:

$$L_f \leq 0.1 * L_b \tag{2.11}$$

Third, the filter should provide adequate attenuation of switching frequency harmonics:

$$\left.\frac{v_l(s)}{v_{inv}(s)}\right|_{s=j\omega_{sw}} = \frac{1}{|1-(L_f C_f)\omega_{sw}{}^2|} \leq 0.2 \tag{2.12}$$

And to mitigate low-amplitude oscillations due to LC filter resonance, a damping resistance (R_d) is added in series with the filter capacitor:

$$R_d = \frac{1}{3*\omega_{res}*C_f} \tag{2.13}$$

2.3.4.2 Design of Output Voltage Control System

The control of the inverter output voltage in this study employs a single-loop topology, which offers simplicity and increased reliability. This method, known as direct voltage control, is particularly suitable for standalone inverters operating at 400 Hz.

The control system compares a sinusoidal reference voltage with the actual load voltage. The resulting error signal is then processed by a voltage controller, Gc(s). The output of this controller

is considered as the inverter voltage (v_{inv}). By dividing this voltage by the DC bus voltage, the system generates the input signal for the PWM block.

To understand the system dynamics, we first consider the differential equations relating to the voltage and current of the LC filter:

$$L_f * \frac{di_{inv}}{dt} = v_{inv} - v_l \tag{2.14}$$

$$\frac{dv_l}{dt} = R_d \frac{di_c}{dt} + \frac{1}{C_f} i_c \tag{2.15}$$

where i_{inv} and i_c represent the inverter output current and filter capacitor current, respectively, and v_l is the load voltage.

Based on these dynamic equations and the single-loop topology, we can construct a block diagram of the direct control method, as illustrated in Figure 9.

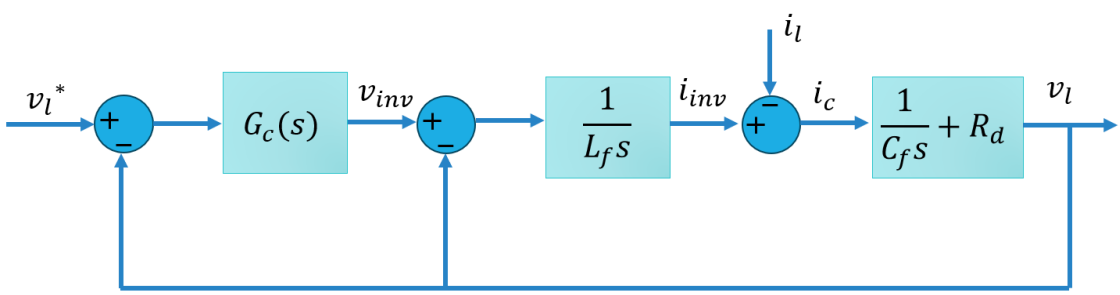

Figure 9: Block diagram of the closed loop circuit of the single-loop output voltage control system [26].

The open-loop transfer function before applying the compensator, Gsy(s), is equivalent to the transfer function of the LC filter:

$$G_{sy}(s) = \left.\frac{v_l(s)}{v_{inv}(s)}\right|_{i_l=0} = \frac{R_d C_f s + 1}{L_f C_f s^2 + R_d C_f s + 1} \tag{2.16}$$

This transfer function exhibits a peak at the resonant frequency (ω_{res}), which can cause fluctuations in the inverter output voltage and potentially lead to instability under certain conditions. To address this, the cut-off frequency is selected to be less than the resonant frequency.

Additionally, due to the application of a sinusoidal signal to the control system, the cut-off frequency (ω_T) must be greater than the base frequency of the output voltage (ω_1). This leads to the following condition:

$$\omega_1 < \omega_T < \omega_{res} \tag{2.17}$$

To meet these requirements and compensate for the phase characteristics of the system, an integrator controller is employed. This controller reduces the bandwidth of the system to below the resonant frequency while providing a -90-degree phase compensation to the open-loop transfer function. The resulting open-loop transfer function becomes:

$$G_{ol}(s) = G_c(s) * G_{sy}(s) = \frac{K_I}{s} * G_{sy}(s) \tag{2.18}$$

where K_I is the integral gain of the controller.

To determine the value of K_I, we apply the gain criteria of the open-loop transfer function at the cut-off frequency:

$$K_I = \frac{\omega_T}{|G_{sy}(j\omega_T)|} \tag{2.19}$$

This design approach ensures that the control system maintains stability while effectively regulating the output voltage of the inverter.

By implementing this control strategy, the inverter can maintain a stable and accurate output voltage across various operating conditions, including load variations and changes in input DC voltage. The simplicity of the single-loop topology contributes to the overall reliability of the system, making it well-suited for applications in aerospace and laboratory testing environments where consistent 400 Hz power is critical.

This design methodology for the output voltage control system, when combined with the carefully designed LC filter, ensures that the 400 Hz inverter can deliver high-quality power with minimal distortion and excellent dynamic response to load changes [26].

2.3.5 Cascaded Half-Bridge (HB) Converter

In recent years, mid-frequency inverter systems have become a key development focus, particularly in naval applications for next-generation vessels. A typical example is the 400 Hz, 115V power supply systems used in naval ships, where the demand for high power output results in heavy load currents. In such systems, ensuring reliability and efficiency is critical. This requires the use of low switching frequencies to mitigate losses and protect the power devices from excessive stress.

To address this, cascaded H-Bridge (CHB) converters have emerged as an effective solution. By employing multiple H-Bridge units in a cascaded topology, it is possible to increase the equivalent switching frequency and significantly reduce the harmonic content in the output voltage. A single-phase inverter with two cascaded H-Bridge units, for instance, can deliver higher quality waveforms with reduced total harmonic distortion (THD), without increasing the switching frequency of individual devices [29].

2.3.5.1 The Inverter Topology

The three-phase inverter adopts a combination topology of three independent single-phase, two H-Bridge unit inverters. Figure 10 illustrates the layout of one phase of the converter. In this configuration, each phase consists of two H-Bridge units, with each unit powered by a DC voltage source, denoted as E_d. The output of each phase is filtered using an inductor L and capacitor C to smooth the output waveform and reduce ripple. The term r represents the equivalent resistance that accounts for various damping factors in the circuit, ensuring proper system stability and damping of oscillations.

A unipolar modulation technique is employed in each H-Bridge unit to control the switching of the semiconductor devices. Additionally, interleaving control is applied between the two cascaded H-Bridge units. The outputs of these units are connected in series at the secondary windings of two transformers, allowing for efficient power transfer and harmonic cancellation. The modulation strategy is designed such that there is a 90° phase shift between the carrier waves of the two H-Bridges [30].

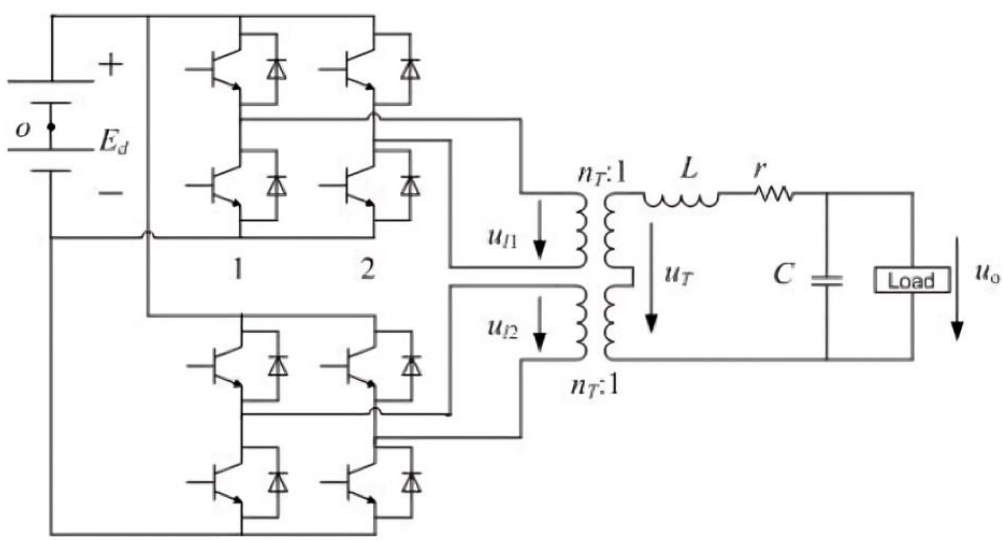

Figure 10: The cascaded single-phase inverter topology [30].

2.3.6 Matrix Converter

The challenge of supplying unbalanced loads, whether in steady-state or during transients, has become a critical point of concern for power converter designers. Traditionally, unbalanced applications have required bulky transformers connected to the power lines, along with special control measures to ensure proper operation. However, the Four-Leg Matrix Converter (MC) offers an efficient and compact electronic alternative to these traditional systems, representing a cost-effective and reliable solution for supplying diverse types of loads.

Matrix converters are direct AC-to-AC converters that eliminate the need for intermediate DC links, and consequently, bulky DC-link capacitors. This feature allows for a more compact design with a high-power density, reducing both size and weight compared to conventional converters. In addition to its compactness, the Four-Leg Matrix Converter achieves unity power factor at the input, making it highly efficient with a superior volume-to-power ratio and a higher Mean Time Between Failure (MTBF) compared to traditional inverter systems [31], [32].

Figure 11 illustrates the schematic of the Four-Leg indirect Matrix Converter [33]. The addition of a supplementary fourth leg is critical in handling unbalanced loads, as it provides a recovery path for the zero-sequence component of the current. This enables the converter to produce uniform output voltage, even under complex or unbalanced load conditions. The inclusion of this fourth leg, however, increases the complexity of the modulation strategy. It changes the modulation of the converter from a straightforward two-dimensional Space Vector Modulation (SVM) to a more complicated three-dimensional SVM, requiring more advanced control techniques.

The Four-Leg Matrix Converter has drawn significant interest in high-frequency applications such as naval, aerospace, and military systems, where compact and lightweight power converters are crucial. In systems like the 115V/400Hz power supplies commonly found in aircraft and ships, conventional controllers face challenges in maintaining voltage regulation due to limited control bandwidth. As a solution, the Repetitive Controller (RC) has been introduced, providing superior control performance in high-frequency applications, ensuring precise voltage regulation despite the constraints of conventional controllers [34].

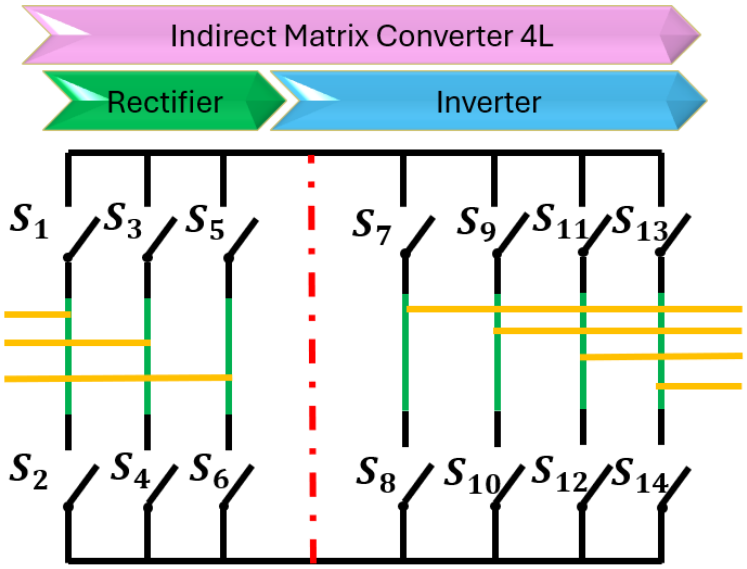

Figure 11: Four-Leg indirect Matrix Converter [33].

The rectification stage plays a crucial role in controlling the input current phase and regulating the DC voltage at the virtual intermediate stage of the converter. To ensure proper switching and prevent short circuits, only two switches are allowed to close simultaneously—one from the upper group and one from the lower group. This switching strategy ensures that no direct short circuit can occur between the input phases.

The rectifier stage uses switches labelled (1) to (6), as shown in Figure 12. These switches operate in a coordinated manner to manage the input current and maintain the desired voltage level. To guarantee safe operation, only nine valid switching combinations are permitted, as depicted in Figure 2. These combinations are carefully selected to avoid short circuits, ensuring the system operates reliably and efficiently.

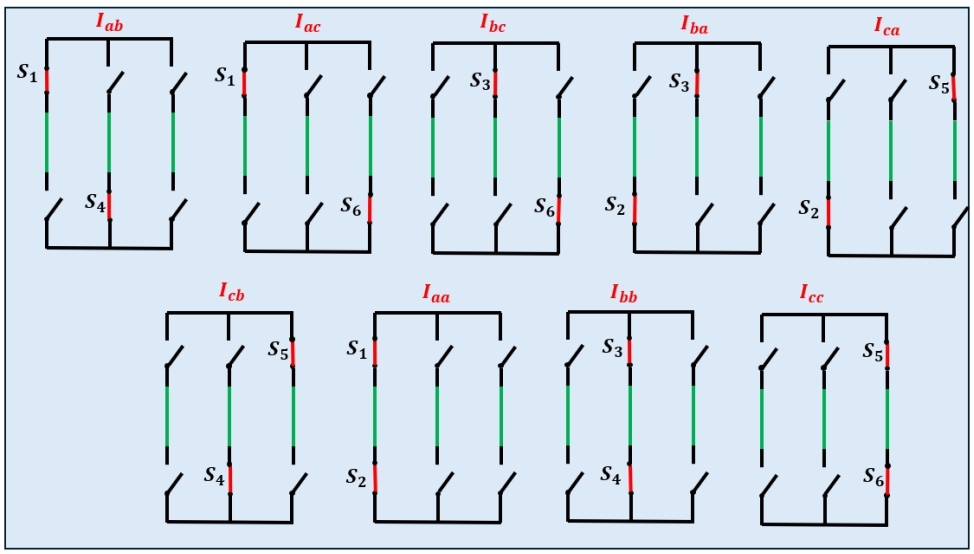

Figure 12: Nine Switching combinations for the Rectifier Stage [33].

In the rectification stage, Space Vector Modulation (SVM) is employed to control the input current. This is done by transforming the three-phase input coordinates from abc to the stationary $\alpha\beta$ reference frame, allowing the system to determine the angle of the reference vector. Once the reference vector is established, the active sector where the vector resides is identified.

For Matrix Converter (MC) modulation, it has been observed through trials that activating only one vector during each sector duration is sufficient, eliminating the need for the more complex synthesis of multiple vectors, as typically required in standard SVM schemes. This simplification reduces computational complexity and switching losses, making the modulation process more efficient while still achieving accurate control over the rectification stage.

The primary objective of the inversion stage is to regulate the output voltage waveform. In four-leg inverters, the additional fourth leg provides a return path for the zero-sequence current

component during unbalanced load conditions, ensuring stable operation. To prevent short circuits, switches on the same leg cannot be turned on simultaneously.

In the four-leg inverter topology, there are sixteen feasible switching combinations that control the output, depicted in Figure 13(a). These combinations are mapped onto a three-dimensional coordinate system represented by $\alpha\beta y$. The resulting modulation space forms a 3D hexagon, in which the conventional 2D sectors of standard SVM are extended into 3D prisms. As shown in Figure 13(b), the 3D hexagon is divided into six prisms, which act as sectors in the modulation process. The reference vector, calculated in the α $\alpha\beta y$ coordinate system, determines the active prism for each modulation cycle, enabling precise voltage control and smoother waveform generation under complex operating conditions.

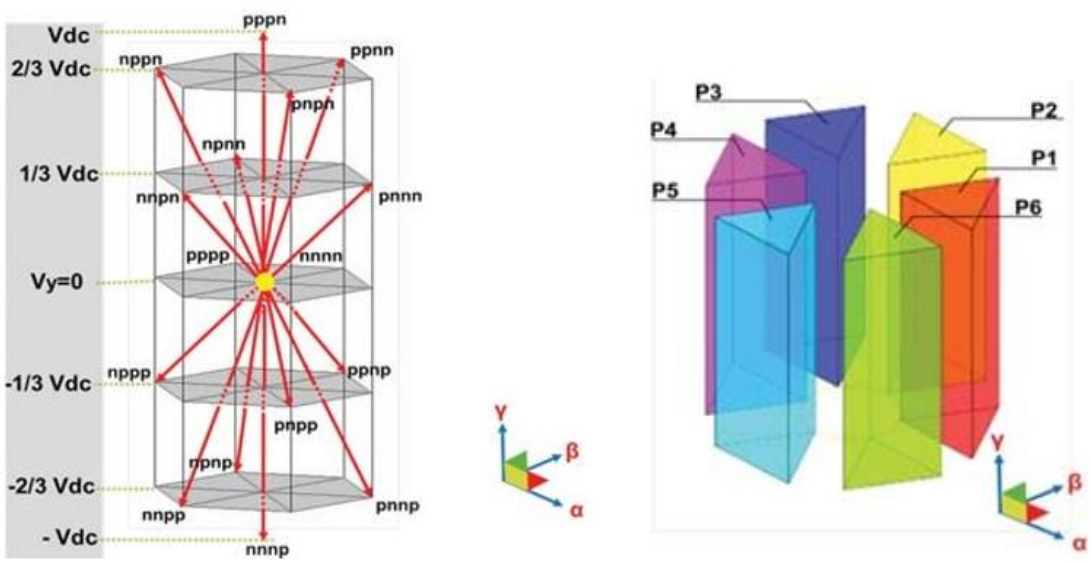

(a) (b)

Figure 13: (a) $\alpha\beta y$ 3D Vector Distribution, (b) Three-dimentional map of prisms in $\alpha\beta y$ [33]

The following table summarizes the advantages and disadvantages of each converter topology, providing a clear comparison of their performance characteristics:

Table 6: Summary of the advantages and disadvantages of each converter topology.

Topology	Advantages	Disadvantages
Neutral Point Clamped (NPC)	- Provides neutral point balancing. - Reduces harmonics and improves power quality.	- Uneven distribution of losses between switches. - Potential for neutral point voltage imbalance.
Active NPC (ANPC)	- Balances losses across switches, improving thermal management. - Lower harmonic distortion.	- Requires more active switches, increasing complexity. - Still needs neutral point balancing.
Hybrid Active NPC	- Combines SiC and Si IGBTs for increased power density. - SiC operates at high frequency for efficiency, while Si IGBTs handle lower frequency for cost-effectiveness.	- Complex space vector PWM techniques requiring more processing power. - Involves sensing currents and DC-link voltage.
Single Half-Bridge (HB)	- Utilizes unipolar PWM for lower Total Harmonic Distortion (THD).	- Limited voltage level control. - Requires precise switching control.
Five-Level Cascaded HB	- Excellent power quality with unipolar PWM. - Capable of achieving high voltage without transformers.	- Complex control. - Higher component count, leading to increased costs and complexity.
Matrix Converter	- Compact design due to the absence of DC-link capacitor.	- High switching losses. - Complex control and modulation strategies.

2.4 Control and Filtering for Converter Design

2.4.1 Proportional-Resonant (PR) controller

Current regulation is a critical aspect of power electronic converters, with significant applications in high-performance motor drives and boost-type pulse-width modulated (PWM) rectifiers. Over the past few decades, research in this field has led to the development of three primary classes of regulators for voltage source inverters: hysteresis regulators, linear PI regulators, and predictive regulators [35]. These can be further categorized into stationary (ABC) frame and synchronous (d-q) frame implementations, based on ac machine rotating field theory [36], [37].

Traditionally, three-phase stationary frame regulators have been considered suboptimal for ac current regulation due to the significant steady-state amplitude and phase errors associated with

conventional PI regulators in this reference frame. In contrast, synchronous frame d-q regulators have been preferred for their ability to achieve zero steady-state error by operating on dc signals in the rotating reference frame. However, synchronous frame regulators are more complex, requiring transformations between stationary and rotating frames, which can introduce errors if the synchronous frame identification is not accurate.

The fundamental difference between stationary and synchronous frame regulators lies in their treatment of sinusoidal signals. Stationary frame regulators operate entirely on ac quantities, leading to steady-state errors due to finite gain at non-zero frequencies [38], [39]. Synchronous frame regulators, on the other hand, operate on both ac and dc signals, allowing for infinite gain and zero steady-state error.

Recent advancements have led to the development of a new type of stationary frame regulator: the Proportional-Resonant (PR) regulator. This innovative approach aims to achieve the same transient and steady-state performance as a synchronous frame PI regulator while operating in the stationary frame. The PR regulator addresses the limitations of conventional stationary frame regulators by providing infinite gain at a selected frequency, typically the fundamental frequency of the ac system.

This section will explore the theoretical foundations, derivation, and practical implications of PR controllers, highlighting their advantages and disadvantages in comparison to traditional control strategies for power electronic converters.

2.4.1.1 Derivation of Three-Phase PR Transfer Functions

To effectively regulate the output of three-phase systems, controllers must eliminate steady-state errors while ensuring dynamic performance across both positive and negative sequence components. Traditionally, this has been done by transforming variables to the synchronous d−q reference frame, where Proportional-Integral (PI) controllers are used. However, this approach introduces additional complexity, particularly under unbalanced grid conditions, as it requires separate control paths for both positive and negative sequence components.

An alternative approach is to use Proportional-Resonant (PR) controllers directly in the stationary α−β reference frame. This avoids the need for coordinate transformations and simplifies the control structure. The PR controller is defined by the transfer function:

$$G_{PR(s)} = K_p + \frac{K_i s}{s^2 + {\omega_0}^2} \tag{2.20}$$

Where K_p is the proportional gain, K_i is the resonant gain, s is the complex frequency variable, and ω_0 is the resonant frequency (typically the grid frequency, 50Hz or 60Hz).

2.4.1.2 Advantages and Disadvantages of PR Controllers

The key advantages and disadvantages of Proportional-Resonant (PR) controllers will be discussed in relation to their application in power electronics and grid-connected systems [40].

Advantages

1. *Elimination of Steady-State Error*
   PR controllers provide infinite gain at the resonant frequency, which effectively eliminates steady-state error for sinusoidal references without the need for transformation to a rotating reference frame. This feature makes them highly effective in applications where precise tracking of AC signals is required, unlike PI controllers in the stationary frame that exhibit persistent errors for sinusoidal signals. This benefit is particularly evident in grid-tied inverter systems and other power electronics requiring accurate sinusoidal signal control.

2. *Improved Harmonic Compensation*
   PR controllers can be easily extended to handle multiple harmonics by adding parallel resonant terms for each targeted harmonic. This feature enables superior harmonic rejection compared to traditional PI controllers. Such harmonic compensation is crucial in grid-connected applications where harmonic distortion needs to be minimized to improve power quality. By focusing on specific harmonic frequencies, PR controllers can significantly reduce Total Harmonic Distortion (THD), contributing to higher efficiency and grid compliance.

3. *Reduced Computational Complexity*
   Operating directly in the stationary reference frame, PR controllers do not require the computationally intensive frame transformations (such as Park or Clarke transformations) typically needed for synchronous frame PI controllers. This makes them less computationally demanding in systems where processing resources are limited, particularly in high-frequency applications like 400 Hz power systems, commonly found in aerospace or military applications. However, it is important to note that while PR controllers avoid transformation complexity, tuning multiple resonant terms can introduce some computational overhead.

4. *Direct Applicability to Single-Phase Systems*
   Unlike synchronous frame controllers that require the creation of a fictitious quadrature component for single-phase systems, PR controllers can be applied directly without modification. This simplifies the control architecture for single-phase inverters and rectifiers, making PR controllers a more straightforward choice for such applications.

Disadvantages

Despite the advantages, PR controllers also present several challenges that need to be considered during the design and implementation stages [40].

1. *Frequency Sensitivity*
   The performance of PR controllers is highly dependent on the system's fundamental frequency. Any deviation from this frequency, such as in weak grids or systems with significant frequency variations, can degrade their performance. This sensitivity necessitates either adaptive control techniques or careful design to ensure robust operation under varying frequency conditions.

2. *Limited Bandwidth*
   PR controllers focus on achieving high gain at specific resonant frequencies, which may result in a limited bandwidth outside those frequencies. This can lead to slower responses to transient conditions or disturbances that fall outside the resonant frequency. While this limitation can be mitigated by incorporating additional resonant terms or tuning for a wider bandwidth, it remains a trade-off when compared to well-tuned PI controllers in the synchronous frame.

3. *Complexity in Gain Tuning*
   Tuning PR controllers can be more complex than traditional PI controllers, especially when multiple resonant terms are used to compensate for higher-order harmonics. The tuning process requires careful attention to ensure that the controller performs as intended at each resonant frequency. In some cases, advanced optimization techniques or self-tuning algorithms may be necessary to achieve the desired control performance.

2.4.3 Control Strategy: Cascaded Control System

Power converters using voltage-source and current-source designs are widely used in various applications such as uninterruptible power supplies (UPSs), dynamic voltage restorers (DVRs), ac-dc rectifiers, and active interfaces for distributed generation systems. These converters typically use high-frequency pulse-width modulation and require passive filters to reduce switching current ripple. Effective control of these systems relies on higher-level control loops that track desired command references.

Researchers have developed several control methods, including repetitive control [41], [42], hysteresis regulation [43], predictive control [44], [45], and multiloop feedback control [46], [47], [48]. Among these, multiloop feedback control has become popular due to its simplicity and ease of implementation.

Multiloop control is often used in systems with LC or LCL passive filters to regulate filtered output voltage or current. This method usually involves an outer loop for steady-state reference tracking and an inner loop for fast disturbance compensation and improved stability. Some studies have also explored disturbance feedforward compensation to enhance system performance.

However, most multiloop control strategies have been developed for specific applications and presented as separate innovations. This approach can make it difficult for new engineers to understand and apply multiloop control concepts across different power conversion systems.

In modern power conversion systems, achieving accurate control over voltage and current, even under nonlinear load conditions, is critical for ensuring system stability, minimizing harmonic distortions, and maintaining power quality. Voltage Source Inverters (VSIs) with LC filters are widely used in applications such as Uninterruptible Power Supplies (UPS) and Dynamic Voltage Restorers (DVR). The multiloop control strategy for these systems ensures precise reference tracking while maintaining stability. This document provides a detailed, step-by-step analysis of the multiloop control strategy for LC-filtered VSIs, the selection of feedback variables, and the significance of harmonic impedance in maintaining output waveform quality.

Figure 14(a) illustrates the general layout of a three-phase voltage source inverter (VSI) connected in series with a passive LC filter. This configuration is commonly used to smooth the output voltage and current, ensuring high-quality power delivery. In Figure 14(b), the system block diagram of one phase is presented, highlighting the four primary control variables: the filter inductor current (i_f), the filter capacitor current (i_c), the load current (i_o), and the filtered output voltage (v_o). These variables are crucial for regulating the converter's performance and ensuring stable operation under various load conditions.

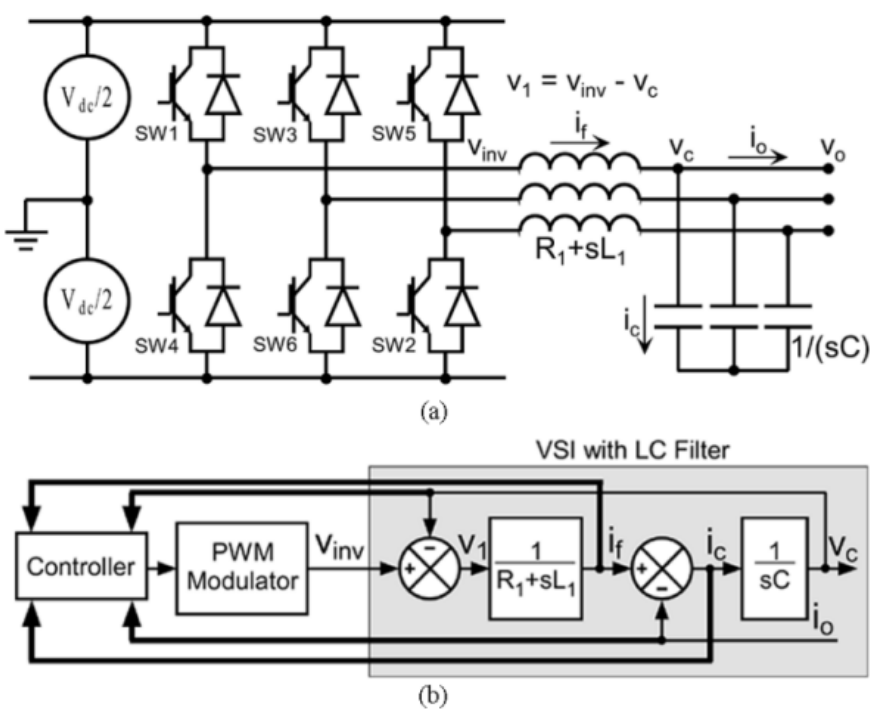

Figure 14: Three-phase VSI with a passive LC filter. (a) Circuit configuration. (b) Per phase block diagram representation [49].

The outer control loop is responsible for output voltage regulation, ensuring that the system tracks the desired reference voltage (or current) with zero steady-state error. This loop is designed to handle slower dynamic changes, such as those related to the load or reference voltage. It typically uses a Proportional-Resonant (P-Resonant) Controller to ensure that the system effectively tracks AC signals like sinusoidal voltage.

The inner control loop focuses on system stability and dynamic response. It ensures fast compensation for disturbances and prevents instability caused by rapid load variations. The key control variables for the inner loop include either the inductor current (i_f) or capacitor current (i_c). The inner loop generally uses a Proportional (P) controller, which offers simplicity and adequate performance for dynamic stability.

Controlling the inductor current provides a fast response to load changes, but due to the inductance, it introduces a delay in reacting to higher frequency harmonic components; however, capacitor current reacts instantaneously to changes in voltage, making it more effective at rejecting harmonic distortions. This method is often preferred for its superior harmonic performance, particularly in rejecting harmonic disturbances that arise due to load nonlinearities.

Harmonic impedance is a critical concept when considering the effect of harmonic currents on the output voltage of the system. Harmonics are voltage or current distortions that occur at integer multiples of the fundamental frequency; those currents can cause voltage distortion, reduced system efficiency, and overheating.

The Bode plot in Figure 15 of the document demonstrates the system's frequency response under different feedback strategies (capacitor current vs. inductor current) [49].

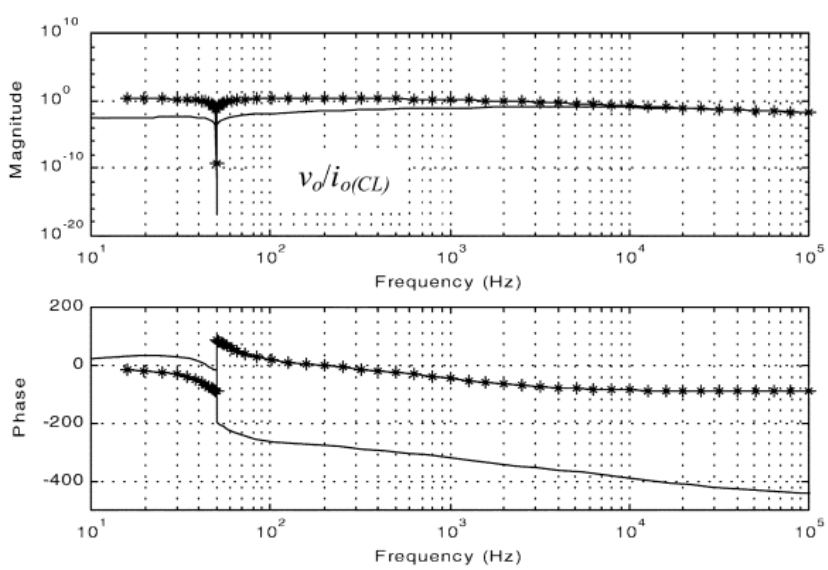

Figure 15: Bode plot of a VSI with an LC filter: capacitor current feedback (—); inductor current feedback (*) [49].

The key conclusions drawn from the Bode plot are:

- Magnitude Response: Lower magnitude at harmonic frequencies indicates better rejection of harmonic currents. Capacitor current feedback shows lower magnitude at harmonic frequencies, meaning it has lower harmonic impedance, making it more effective in rejecting harmonics and maintaining voltage quality.
- Phase Response: While the phase response primarily impacts system stability, the critical observation here is the lower magnitude at harmonic frequencies with capacitor current feedback, indicating superior harmonic rejection.

2.4.3.1 Multiloop Control of VSI with LCL Filter

The Voltage Source Inverter (VSI) with an LCL filter is a more complex system compared to simpler configurations like LC or CL filters. The LCL filter is designed to provide superior attenuation of high-frequency switching harmonics, which is essential in applications where minimizing harmonic distortion is crucial, such as grid-connected inverters.

However, while the LCL filter offers better harmonic attenuation, it introduces stability challenges due to the additional pole in the transfer function, making the system more prone to resonance issues. To address this, advanced control techniques, such as multiloop control, are necessary to ensure stable operation and good system performance.

A key issue with LCL filters is the resonant frequency they introduce, which can lead to instability if not properly managed. Multiloop control helps dampen this resonance, ensuring system stability. In particular, the design of the inner control loop is critical, as it must respond quickly to disturbances while effectively suppressing resonance from the LCL filter. A well-tuned Proportional-Resonant (PR) controller, set to the system's fundamental frequency, can eliminate steady-state errors while maintaining stability and robust performance [49].

Chapter Three

3. Proposed System Configuration and Control Design

3.1 Proposed System Configuration

This chapter describes the proposed cascaded 5-level H-bridge converter topology for 400 Hz output, detailing the system architecture and its advantages. It then explores the design of the control system, focusing on two cascaded control loop configurations: one with inner and outer Proportional-Resonant (PR) controllers, and another combining an outer PR controller with an inner Proportional (P) controller. The chapter covers the power stage, modulation technique, filter design, and controller tuning process using root locus and Bode plot analyses. Throughout, the chapter demonstrates how the integration of this multilevel topology with advanced control strategies achieves high-quality output, particularly beneficial for aerospace and maritime applications requiring precise 400 Hz power conversion.

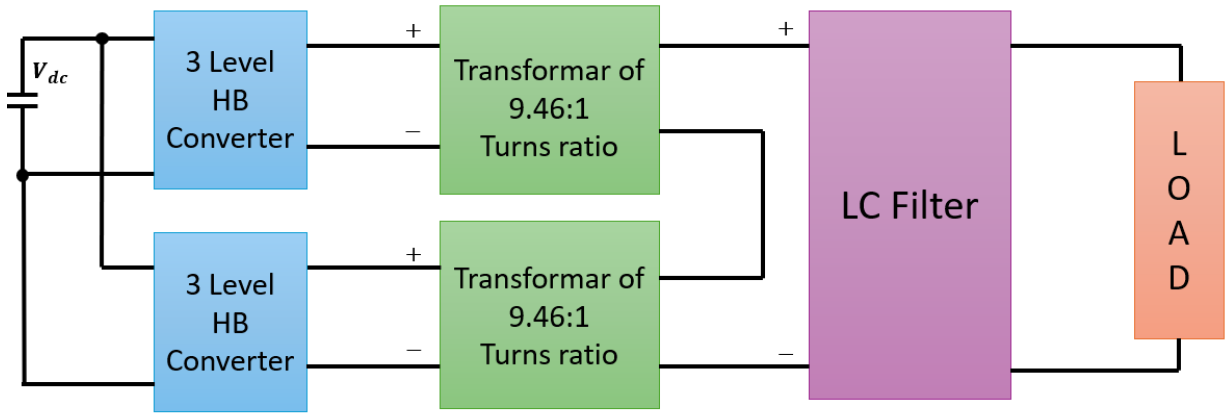

Figure 16: The proposed system configuration.

The proposed system, a cascaded 5-level H-bridge converter with two single-phase transformers per phase, is an excellent choice for 400 Hz converter applications in naval systems due to several key advantages related to its topology, modulation technique, and filtering. This combination provides high power quality, efficiency, and reliability, all of which are essential in the demanding environments of naval power systems.

3.1.1 Cascaded 5-Level H-Bridge Converter Topology:

The cascaded H-bridge topology offers significant benefits for naval systems. It inherently reduces total harmonic distortion (THD) by generating an output waveform that closely resembles a sinusoid. The 5-level converter minimizes the need for extensive filtering, as it produces lower harmonic content compared to simpler topologies. This is particularly critical in high-power naval applications, where sensitive systems require clean, stable power. When the converter operates with a modulation index of 0.8, it maintains its 5-level operation, which is optimal for reducing harmonics. However, should the modulation index fall to 0.5 or below, the system behaves more like a 3-level converter, increasing the harmonics, which could degrade power quality.

3.1.2 Transformer Integration for Isolation and Current Stress Reduction:

The system employs two single-phase transformers per phase, offering crucial galvanic isolation and enabling the use of just one DC link capacitor for the entire 3-phase system. This significantly reduces component complexity and improves reliability. The transformers are connected to the high-voltage side of the converter, where current levels are lower, thus reducing the current stress on the switching devices. This setup enhances both the thermal performance and lifespan of the switches, making the system more robust for naval environments where long operational life is critical.

3.1.3 Transformer Turns Ratio and Modulation Index:

The turns ratio of the transformers is derived based on two factors: the modulation index and the filter design requirements. By operating at a modulation index of 0.8, the system ensures efficient utilization of the available DC voltage, achieving the desired output voltage with minimal harmonic content. Additionally, the turns ratio is influenced by the design of the LC filter to ensure that the voltage at the secondary side of the transformer (input to the filter) matches the required output voltage. For naval applications operating at 400 Hz, this equates to an output voltage of 115V RMS (or 163V peak). The careful selection of the turns ratio ensures that the filter operates with minimal voltage drop, maintaining $V_{out} \approx V_{in}$ at the fundamental frequency.

3.1.4 LC Filter Design and Voltage Profile:

The LC filter is designed to further suppress any high-order harmonics while allowing the fundamental frequency to pass through with minimal attenuation. The filter inductance is sized to ensure that the voltage drop across it at 400 Hz is very small, maintaining a nearly 0 dB attenuation at the fundamental frequency. This allows the system to meet stringent power quality standards required for naval applications, ensuring that the output voltage is stable and clean. Moreover, the careful design of the filter ensures that the voltage drop is minimized across the inductor, reducing the system's reactive power needs.

3.1.5 Modulation Technique – Phase-Shifted PWM (PSPWM):

A key feature of this system is the use of Phase-Shifted Pulse Width Modulation (PSPWM), which enhances the converter’s performance by improving the switching efficiency. The PSPWM technique involves shifting the carrier signals of the two H-bridges per phase by 90 degrees. This phase-shifting allows each H-bridge to operate at a lower switching frequency, reducing the switching losses and stresses on individual switches. However, the effective switching frequency of the system is four times the switching frequency of a single H-bridge, due to the combined output of the phase-shifted bridges. This results in a smoother output voltage waveform with significantly reduced EMI (electromagnetic interference) and less reliance on extensive filtering. In high-power 400 Hz systems, minimizing switching losses is crucial for maintaining overall system efficiency, particularly when thermal management and power density are critical.

3.1.6 Overall System Benefits:

The combination of the cascaded H-bridge topology, transformer isolation, PSPWM modulation, and optimized LC filter makes this system highly suitable for 400 Hz naval applications. The system offers excellent harmonic performance, reduced switching losses, and high reliability—all of which are essential for the harsh and demanding operational environment of naval power systems. By leveraging PSPWM, the converter can operate efficiently at a lower switching frequency while still producing high-quality power output, further extending the life of the switching devices and reducing the complexity of thermal management.

3.2 Design of the Controller In the S-domain

The design procedure of the control system starts by obtaining the relevant inductor and capacitor values of the LC filter. These values are obtained by first analysing the harmonic content of the output voltage of a 5 level CHB shown in Figure 17. It can be seen that because of the 5 levels in the output voltage the overall THD is very low as compared to 2-level and 3-level converter topologies. However, to meet the specifications of our design which is to have a THD is as low as 5 percent for type 2 and as low as 3 percent for type 3 electric power for shipboard systems the filter must be designed in order to suppress the high order harmonics in the output voltage waveform [50]. The other good thing about using a 5-level CHB topology can be seen from Figure 18 which is that the first band of harmonics reside at 30 harmonic order (12000 Hz) while our carrier signal is at 3000 Hz frequency by using a technique called phase shift PWM. This means that your carrier frequency can be low but still obtain a high THD as the frequency of the first band of harmonics will appear at 4 times the carrier frequency.

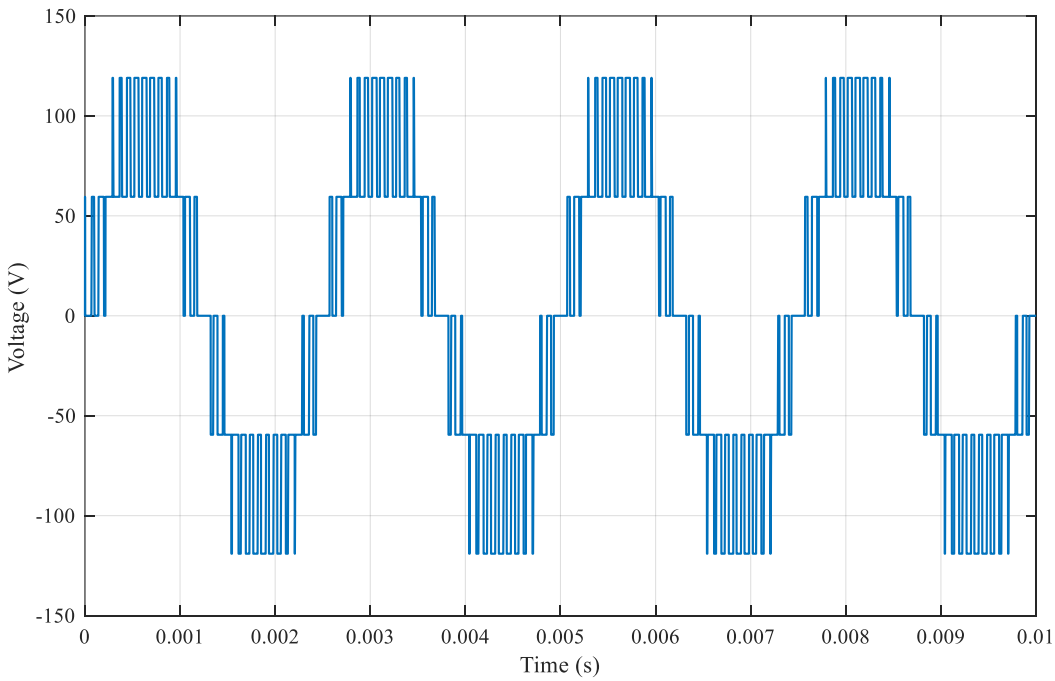

Figure 17: Output Voltage of a 5-Level Cascaded H-bridge.

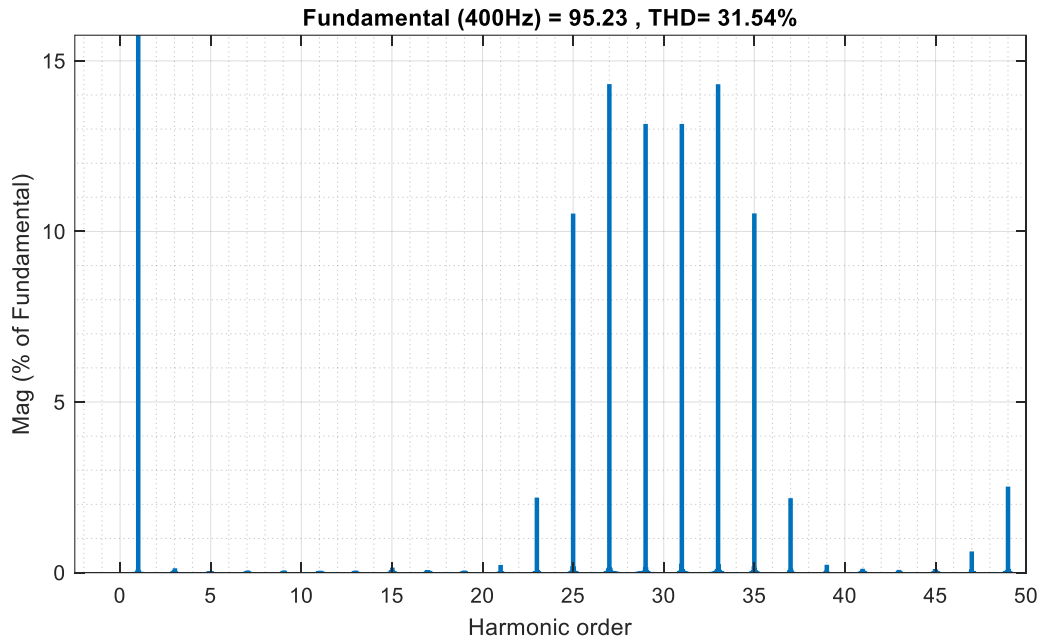

Figure 18: Fourier series analysis of output voltage of a 5-level CHB.

For a good filter design all harmonics need to be under 3 percent of the fundamental voltage magnitude in order to satisfy type 2 and type 3 power. To accomplish this the following calculations were made:

From Figure 17 it can be seen that in order for our THD to be lower than 3% we need a filter cut-off frequency which will ensure that the 25th harmonic order is suppressed from the 11 % magnitude which it currently has to some value below 3 %. By designing such a filter, the other higher order harmonics will also be attenuated.

$$Magnitude\ of\ 25^{th}\ harmonic\ (V) = 0.11 \times 95.23 = 10.4753$$

$$Desired\ Magnitude\ of\ 25^{th}\ harmonic\ (V) = 0.03 \times 95.23 = 2.8569$$

$$Magnitude\ of\ 25^{th}\ harmonic\ (dB) = 20\ \log_{10} \frac{2.8569}{10.4753} = -11.29dB$$

$$\rightarrow -11.29dB = 40\ \log_{10} \frac{f_c}{25 \times f_o}$$

Where f_c is the desired filter cut-off frequency and f_o is the fundamental frequency. From the above equation after solving for f_c it was found that the filter cut-off should be less than 5222 Hz. However, to account for the pulse width modulation input being not a pure sinusoid

the filter cut-off must be designed to be much less than the calculated value.

The values of inductance and capacitance chosen were 13uH and 400uF respectively. After obtaining the parameters of the plant the controller gains can now be deduced.

Figures 19, and 20 show control systems under examination:

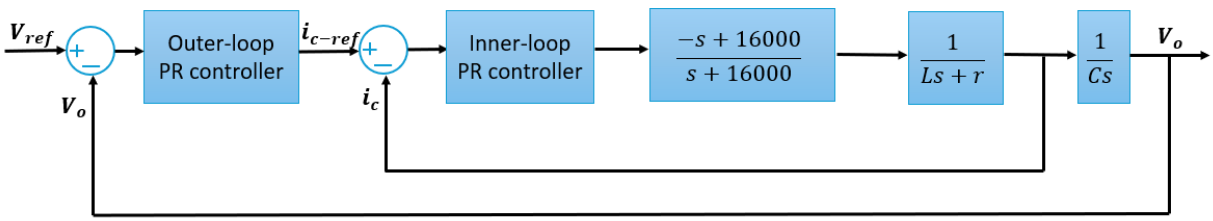

Figure 19: Cascade control loop with outer PR and inner PR controllers.

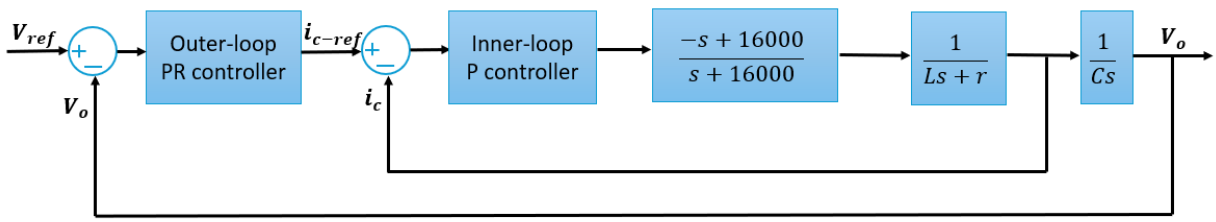

Figure 20: Cascade control loop with outer PR and inner P controllers.

In designing control systems for power converters, accurate modeling of real-world behaviors, including DSP-induced time delays, is crucial for ensuring system stability and performance. To address the challenges posed by these nonlinear delays, padé approximations are employed to convert the exponential time delay into a rational function. This transformation enables the use of linear system analysis tools such as root locus, Bode plots, and Nyquist plots. Typically, padé approximations with equal-order numerator and denominator polynomials are used to maintain a constant 0 dB gain across all frequencies. After comparing the system's response with various padé approximation orders against the actual exponential delay, as shown in Figure 21, it was determined that a first-order padé approximation (1/1 order) sufficiently represents the time delay for the control system design.

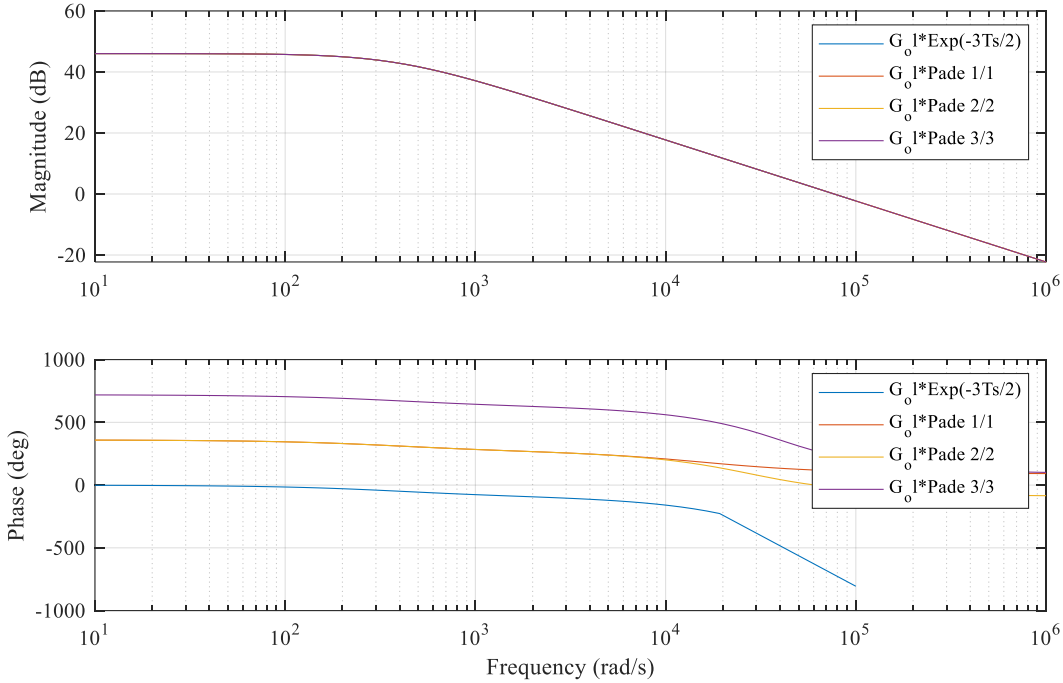

Figure 21: Bode plots of non-linear exponential delay versus different padé approximations.

The control system employs a cascaded architecture, consisting of an inner current loop and an outer voltage loop. The design process begins by determining the proportional gains of both loops, initially disregarding the resonant gains of the PR (Proportional-Resonant) controllers. This approach is justified because the resonant terms primarily affect frequencies near the resonant frequency, having minimal influence on other frequency ranges [51]. Consequently, the system's bandwidth is predominantly determined by the proportional gains.

The design procedure prioritizes the inner controller's proportional gain before addressing the outer controller. This sequence ensures a stable foundation for the cascaded structure. Figure 22 illustrates key performance indicators of the inner current open loop control: a gain margin of 5.98 dB and a phase margin of 38.4 degrees. Notably, the phase margin occurs at 1220 Hz, providing a reliable approximation of the inner loop's bandwidth. The current proportional gain for the inner controller is set at 0.1.

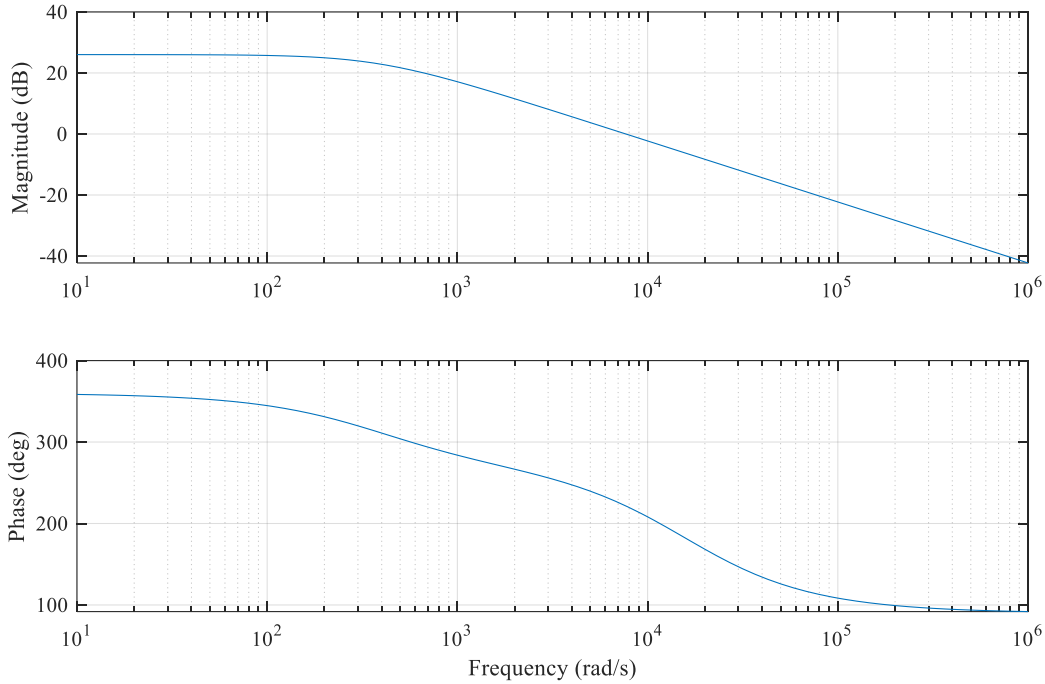

Figure 22: Bode plot of the inner current open-loop transfer function with a P controller.

Figure 23 reveals critical stability parameters for the voltage open loop: a gain margin of 5.7 dB and a phase margin of 68.7 degrees. The phase margin occurs at 446 Hz, which, when compared to the inner loop's phase margin frequency of 1220 Hz, indicates that the inner loop's bandwidth is approximately 2.7 times greater than the outer loop's. This significant difference in bandwidths translates to the inner loop responding nearly three times faster than the outer loop.

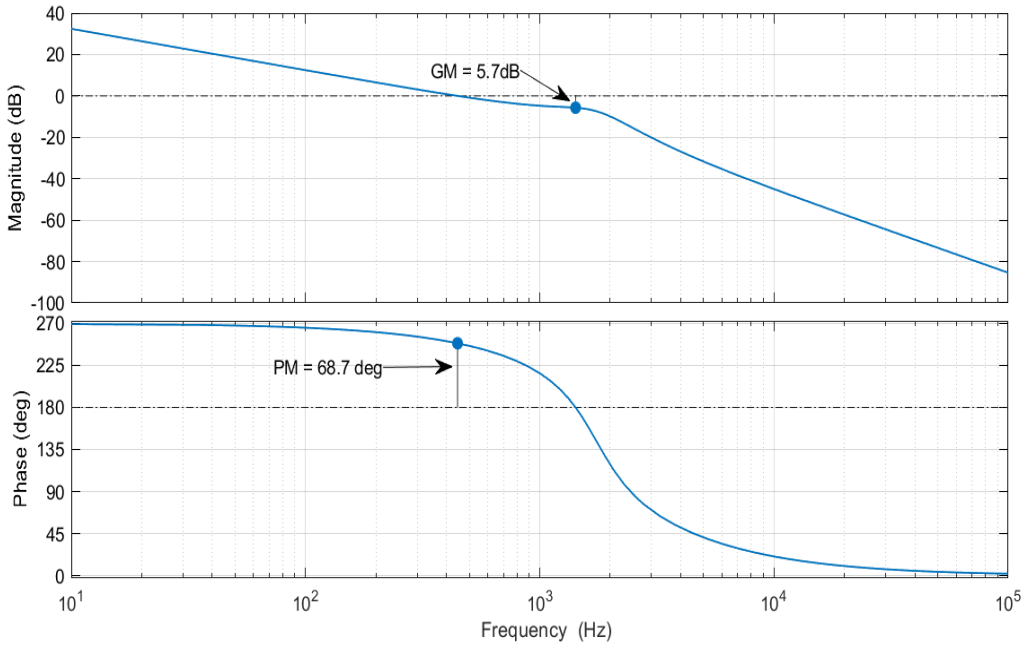

Figure 23: Frequency response of the overall open-loop control system with only the proportional terms of the outer and inner PR controllers.

This speed disparity is a key advantage of the cascaded control topology, enhancing the overall dynamic performance of the system. A single, non-cascaded loop would typically result in slower overall system response. Moreover, the outer loop's phase margin (68.7 degrees) is almost double that of the inner loop, indicating that the cascaded structure also contributes to improved overall system stability.

The combination of a faster inner loop and a more stable outer loop allows for rapid current adjustments while maintaining precise voltage control. This hierarchical structure offers superior performance in both speed and stability compared to a single-loop system. For optimal performance within this cascaded topology, the voltage proportional gain for the outer controller is set at 1.1, striking a balance between responsiveness and stability.

Based on the analysis of following Figure 24, the inner PR controller exhibits three distinct resonances at frequencies of 1200 Hz, 2000 Hz, and 2800 Hz. Notably, the phase margin remains consistent at 37.4 degrees, mirroring the results observed in Figure 3.7. This consistency demonstrates that the incorporation of the resonant term into the proportional control does not alter the bandwidth achieved by the proportional control alone. Furthermore, this observation underscores the localized impact of the resonant term in the PR controller, as it exclusively influences frequencies within its immediate vicinity. The preservation of bandwidth and phase margin, coupled with the targeted frequency response, highlights the PR controller's ability to enhance specific frequency performance without compromising overall system stability or

responsiveness. The resonant gain constant of the inner PR controller with the open-loop characteristics shown in figure 3.9 is 0.5.

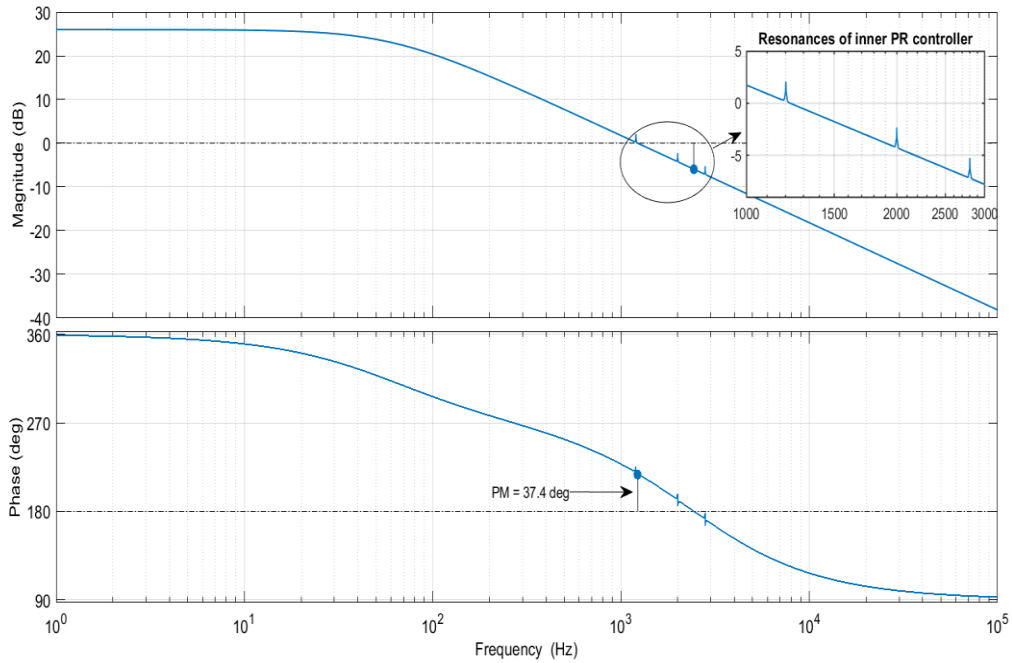

Figure 24: Bode plot of the inner current open-loop transfer function with a PR controller.

The root locus plots of the inner closed-loop system, as depicted in Figures 25, and 26, reveal striking similarities between the systems employing PR and P controllers. The primary distinction lies in the PR controller's characteristic six poles positioned along the imaginary axis, symmetrically distributed above and below the real axis. These poles correspond to the three resonant frequencies at the 3rd, 5th, and 7th harmonic orders. Notably, six zeros coincide with these poles, effectively neutralizing their impact on the system's dynamic response. This cancellation ensures that both PR and P controller configurations exhibit equivalent dynamic behavior and, consequently, identical bandwidth. While Bode plots serve as valuable tools for assessing the system's steady-state performance, root locus plots prove instrumental in evaluating the dynamic responses of the control system. This comparative analysis underscores the complementary nature of these analytical techniques in providing a comprehensive understanding of the system's behavior across various operational conditions.

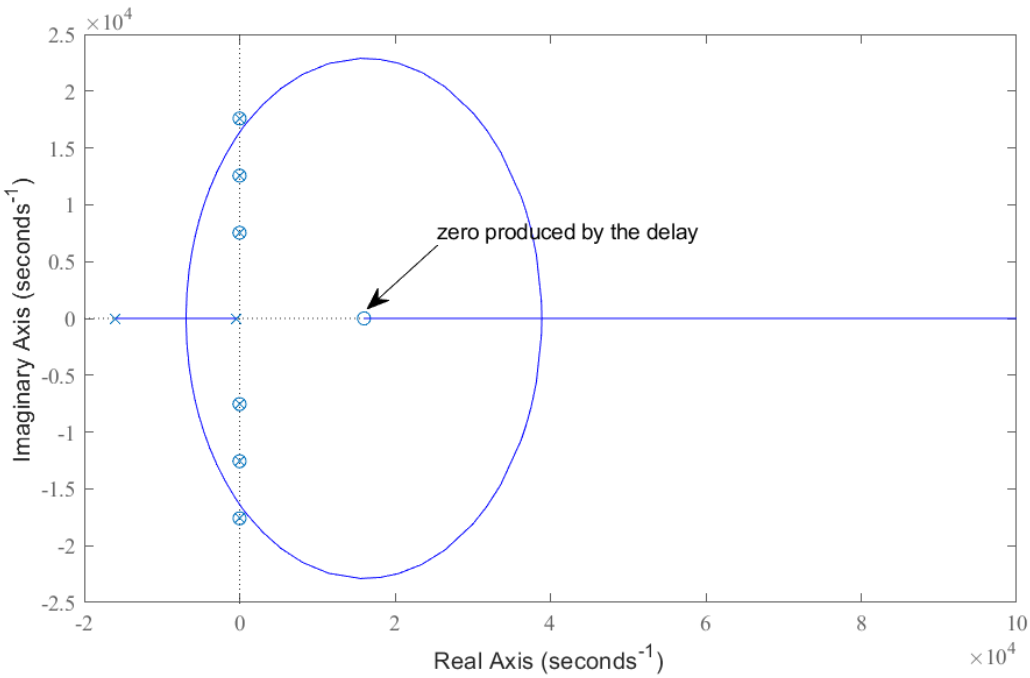

Figure 25: Root locus plot of the inner current closed-loop transfer function with a PR controller.

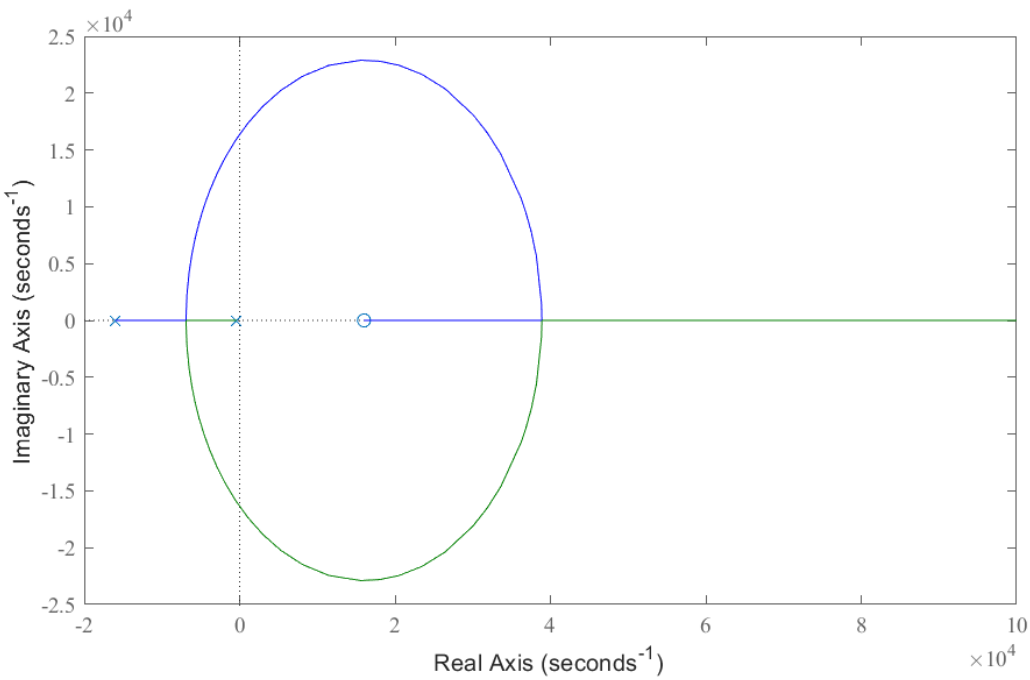

Figure 26: Root locus plot of the inner current closed-loop transfer function with a P controller.

Figure 27 illustrates the frequency response of the outer PR (Proportional-Resonant) controller, highlighting a distinctive resonance at 400 Hz. This resonance is characterized by a remarkably high magnitude of 45 dB and a sharp decrease in phase angle. The substantial gain at this specific frequency, coupled with the rapid phase transition, plays a crucial role in the system's performance, enabling the cascaded control system to effectively track a 400 Hz reference voltage sinusoid with minimal steady-state error.

The resonant gain constant of the outer PR controller is 2300. This high gain at the target frequency allows the controller to swiftly adjust its output in response to errors, enhancing the system's ability to track the reference signal accurately. Comparing the control system with and without resonant terms reveals significant differences in stability and performance. The system with only proportional terms (Figure 23) shows a gain margin of 5.7 dB, while the full PR control system (Figure 27) has a reduced gain margin of 4.87 dB. Similarly, the proportional-only system exhibits a phase margin of 68.7 degrees (Figure 23), whereas the PR system's phase margin decreases to 18.1 degrees (Figure 27).

In terms of bandwidth, the PR control system demonstrates an increase, with the frequency at phase margin rising from 446 Hz in the proportional-only system to 635 Hz in the full PR system. These comparisons indicate that adding resonant terms to the cascaded control system has both advantages and trade-offs. The increased bandwidth of the PR system results in faster tracking of the reference signal, improving dynamic response. However, the lower gain and phase margins of the PR system indicate a decrease in overall system stability compared to the proportional-only system. Notably, the PR controller provides superior tracking at the target frequency (400 Hz) due to its high resonant gain, enhancing frequency-specific performance.

In conclusion, the incorporation of resonant terms in the cascaded control system enhances dynamic response and frequency-specific performance at the cost of reduced overall system stability. This trade-off must be carefully considered in the controller design process to balance the need for accurate tracking at specific frequencies with the requirements for system stability and robustness.

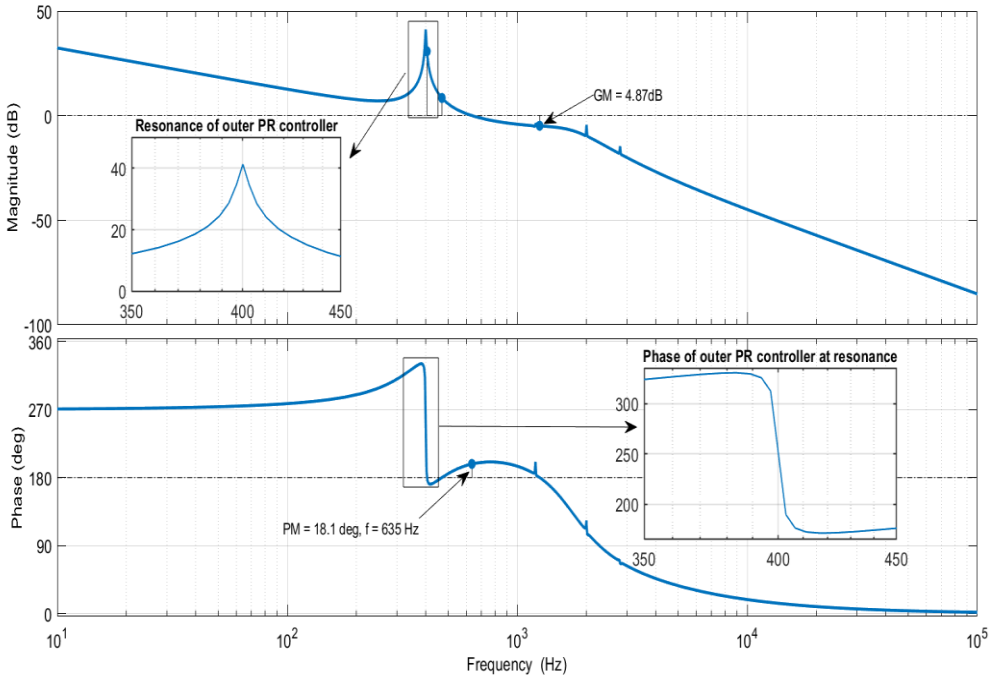

Figure 27: Frequency response of the overall open-loop control system with both the proportional and resonant terms of the outer and inner PR controllers.

Figure 28 presents the closed-loop frequency response of the entire control system, offering crucial insights into its behavior at the target frequency. At 400 Hz, the magnitude response of the control system reaches precisely 0 dB, while the phase response approaches 360 degrees (equivalent to 0 degrees). This specific combination of magnitude and phase characteristics at the target frequency is significant. It indicates that when a 400 Hz sinusoidal input is applied to the closed-loop system, the output signal maintains the same amplitude as the input (due to the 0 dB gain, which corresponds to a multiplication factor of 1) and experiences no phase shift (as 360 or 0 degrees implies perfect alignment with the input). Consequently, this behavior demonstrates the system's ability to track a 400 Hz reference signal with exceptional accuracy, effectively reproducing the input without distortion in either amplitude or phase. Such precise tracking at the target frequency underscores the effectiveness of the PR controller design in achieving its primary objective of accurate sinusoidal reference following.

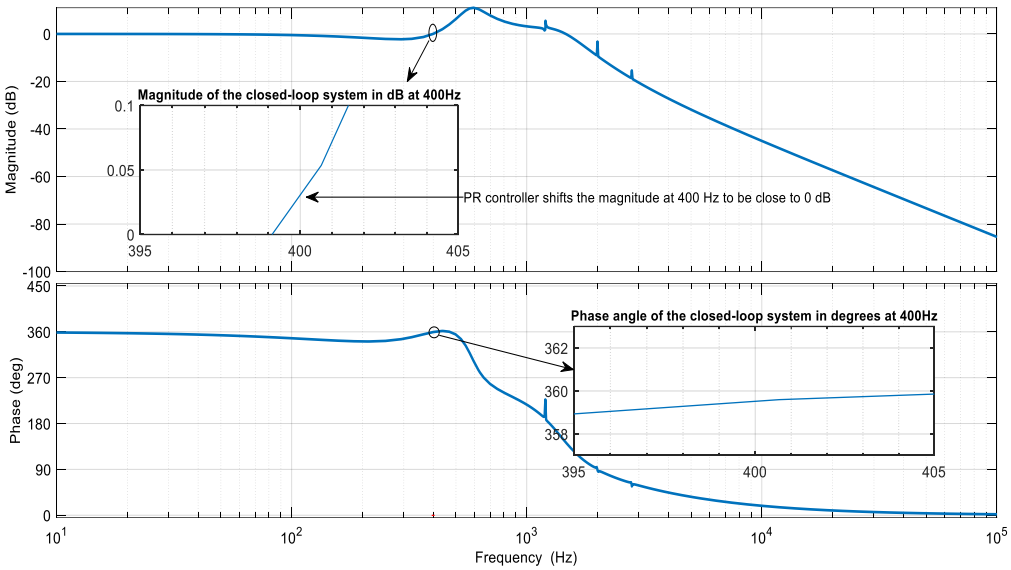

Figure 28: Closed-loop frequency response of the whole system with the outer and inner PR controllers.

Analysis of Figure 29 demonstrates that the closed-loop steady-state frequency response of the overall control system remains largely unaffected when substituting the inner PR controller (with resonances at the 3rd, 5th, and 7th harmonic orders) with a simpler inner proportional controller. This consistency in response can be attributed to the minimal resonant gains in the inner PR controller. Examination of the root locus plots in Figures 3.15 and 3.16 reveals striking similarities between the two control system configurations. The primary distinction lies in Figure 30, which exhibits six additional poles and zeros at identical positions, resulting from the inner PR controller. These poles and zeros effectively cancel each other out, while the configuration in Figure 31, featuring an inner P controller, lacks these elements. Both root locus plots share common poles and zeros stemming from the outer PR controller, including those associated with the 400 Hz fundamental resonance and zeros from the proportional term. Additionally, a zero appears on the right side of the real axis in the s-plane, indicative of a system delay equivalent to 1.5 times the sampling period (1/12000 Hz). This comprehensive analysis supports the decision to replace the more complex dual PR controller configuration with a simplified system comprising an outer voltage PR controller and an inner current P controller, as it maintains comparable steady-state and dynamic performance without significant loss in overall system efficacy.

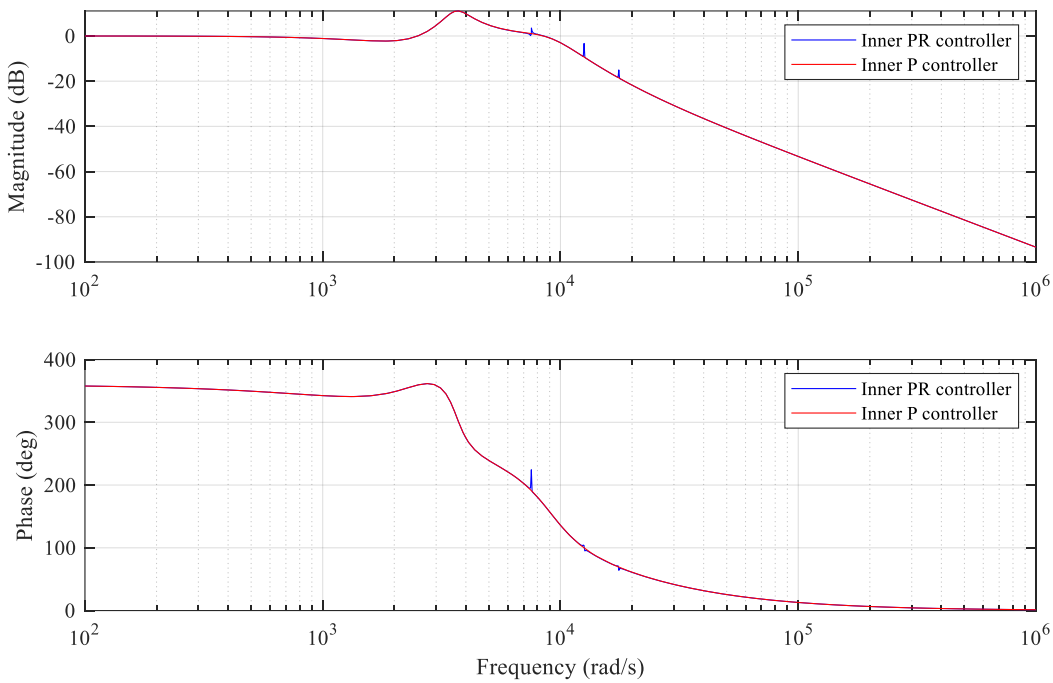

Figure 29: Comparison of closed-loop system with an inner P-controller instead of an inner PR-controller.

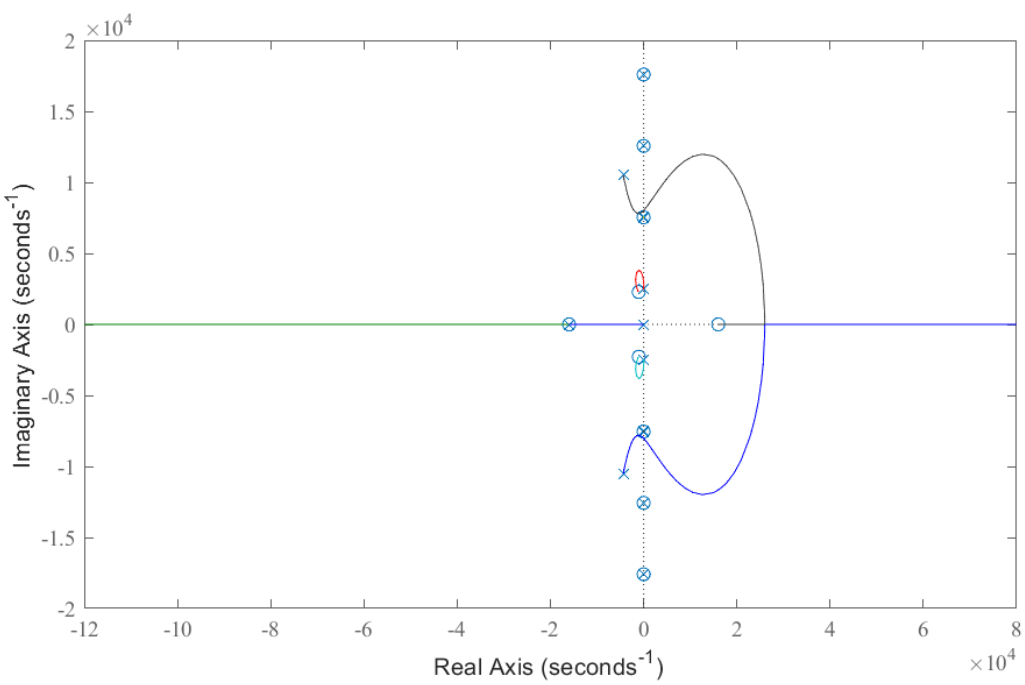

Figure 30: Root locus plot of the outer voltage closed-loop transfer function with 2 PR controllers (outer and inner).

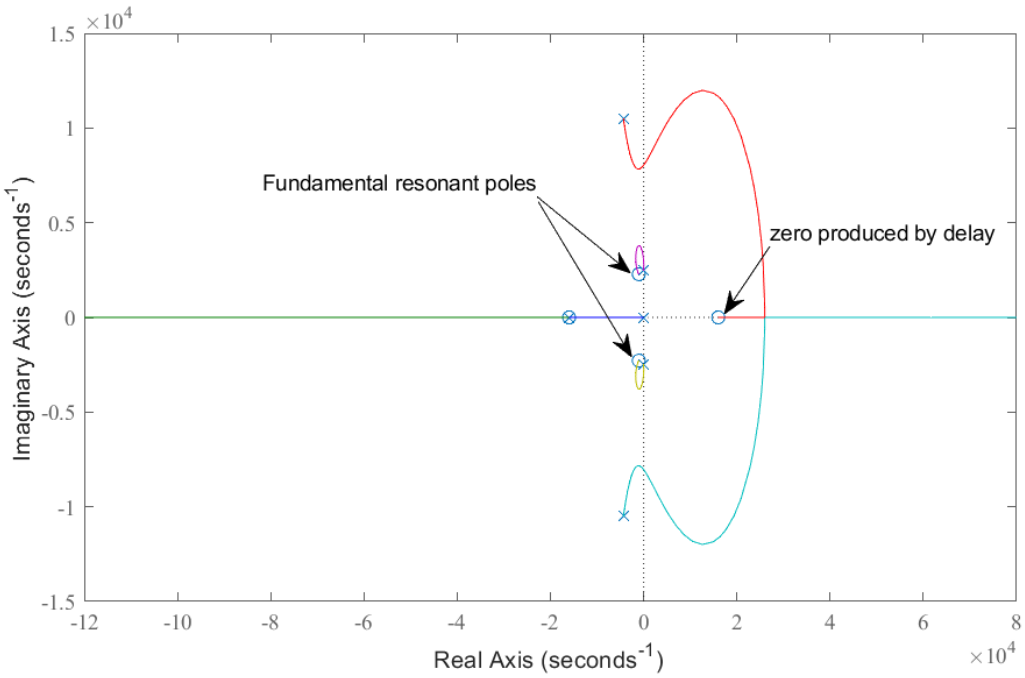

Figure 31: Root locus plot of the outer voltage closed-loop transfer function with an outer PR controller and an inner P controller.

Table 7 summarizes all the gain values of all the controllers of the 2 cascaded control system configurations.

Table 7: Outer and inner PR controller gain values.

Description of Variable	**Variable**	**Value**
Outer voltage proportional gain of the outer PR controller.	Kv	1.1
Inner current proportional gain of the inner PR and P controllers.	Ki	0.1
Outer voltage resonant gain (at 400 Hz) of the outer PR controller.	Kr1	2300
Inner current resonant gain (at 1200, 2000 & 2800 Hz) of the inner PR controller.	Kr357	0.5

Following the determination of controller parameters for both voltage (outer) and current (inner) controllers, the closed-loop system response was evaluated using a MATLAB implementation of the modeled system's closed-loop transfer function in the s-domain. The system was subjected to a 400 Hz sinusoidal input with a magnitude of 115 and a phase shift of 0 degrees. This analysis spanned 20 seconds, with data points calculated at intervals of half the sampling period (Ts/2). Figure 32 presents the results of this numerical evaluation, convincingly demonstrating the closed-loop system's ability to track the 400 Hz sinusoidal input signal with high precision. The plot reveals that after a brief initial transient period of approximately 0.006 seconds, the control system achieves accurate tracking. These results underscore the successful implementation of both the cascaded PR control strategy and the cascaded PR with P control strategy, which yielded similar performance in achieving accurate reference following for AC systems operating at the specified 400 Hz frequency. This analysis validates the effectiveness of the developed control schemes in maintaining precise output regulation for applications demanding high-quality 400 Hz power.

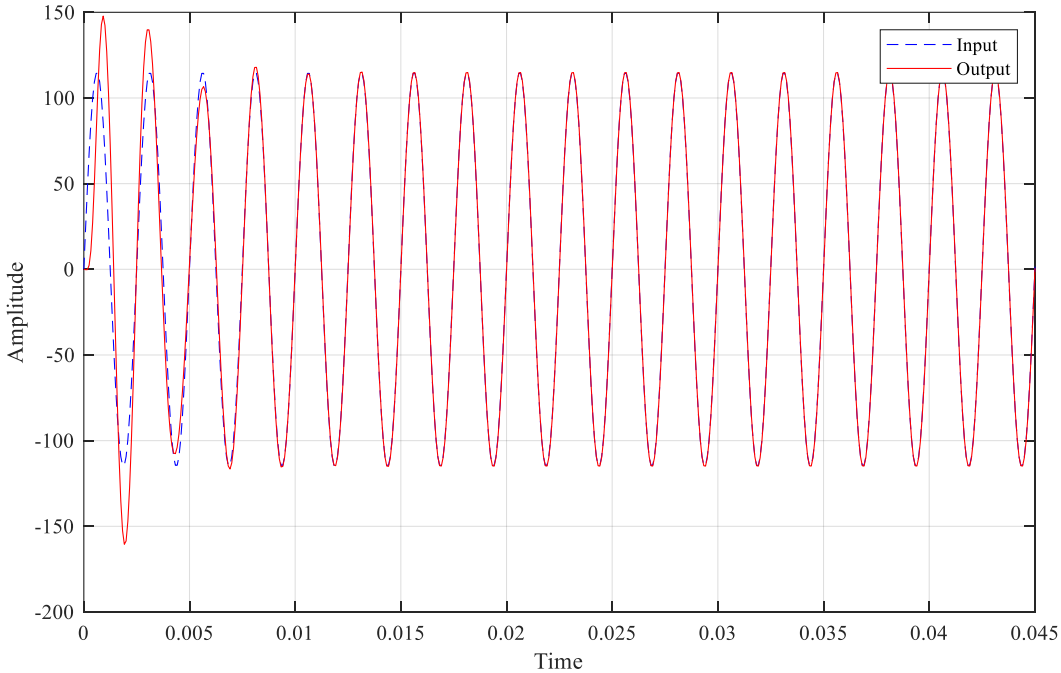

Figure 32: Sinusoidal input response of the closed-loop control system.

3.3 Design of the Controller in the Z-domain

Having successfully designed the PR controller in the continuous-time s-domain, the next critical step is to derive its equivalent discrete-time z-domain transfer function. This transformation is essential because modern power converter systems typically implement control algorithms using digital signal processors (DSPs) or microcontrollers. For real-world applications, a digital controller equivalent of the s-domain controller is necessary to enable practical implementation and execution at discrete time intervals. In this case, a sampling frequency of 12,000 Hz was chosen, which is sufficiently high to capture the dynamics of the system and avoid aliasing effects. The conversion from s-domain to z-domain was accomplished using the bilinear transformation, also known as Tustin's method.

The transformation from continuous-time (s-domain) to discrete-time (z-domain) was performed for the Proportional-Resonant (PR) controllers at a sampling frequency of 11200 Hz. This conversion is essential for digital implementation while maintaining the controllers' characteristics. The inner Proportional (P) controller, being a constant gain, remains unchanged in the discrete domain. Equations 3.1 and 3.2 present the z-domain representations of the outer and inner PR controllers. These transformations ensure that the control system's performance is preserved when implemented in digital hardware, maintaining its effectiveness at the target 400 Hz operation.

$$\mathrm{Gv_z} = \frac{1.199\,z^2+2.156\,z+1.005}{z^2+1.955\,z+0.9983} \tag{3.1}$$

$$\mathrm{Gi_z} = \frac{0.1001z^6-0.2826z^5+(0.5158\,)z^4-(0.5977)z^3+(0.5147)z^2-(0.2814)z+(0.09944)}{z^6-2.825z^5+(5.157\,)z^4-(5.977)z^3+(5.148)z^2-(2.815)z+(0.995)} \tag{3.2}$$

Figures 33, 34, 35, and 36 present a comprehensive comparison of the PR controller's frequency response characteristics in both the s-domain and z-domain. The conversion from the continuous s-domain to the discrete z-domain was accomplished using the Tustin method with frequency prewarping. This prewarping technique was applied to ensure accurate matching at the critical resonant frequencies: 400 Hz for the outer controller, and 1200 Hz, 2000 Hz, and 2800 Hz for the inner controller. By implementing frequency prewarping, the method compensates for the frequency warping effect inherent in the bilinear transformation, particularly at higher frequencies. The results demonstrate remarkable congruence between the s-domain and z-domain representations for both the open-loop and closed-loop transfer functions of the control system. This close matching is observed across the entire frequency range of interest, with particular accuracy at the prewarped resonant frequencies.

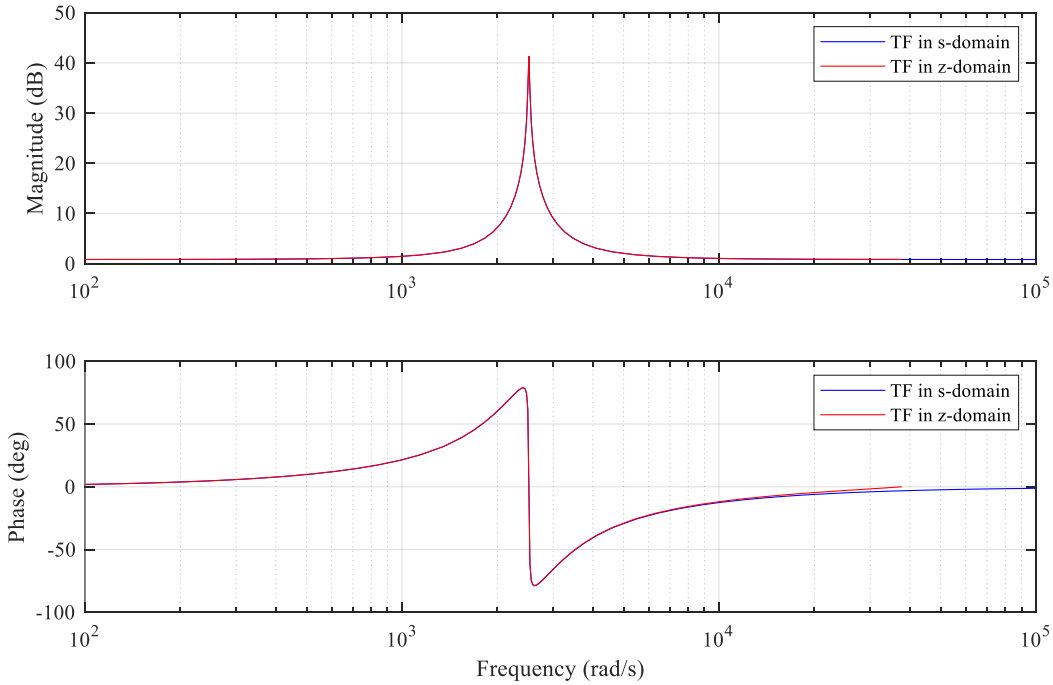

Figure 33: Frequency response plot of the outer voltage controller transfer function in s-domain vs in z-domain.

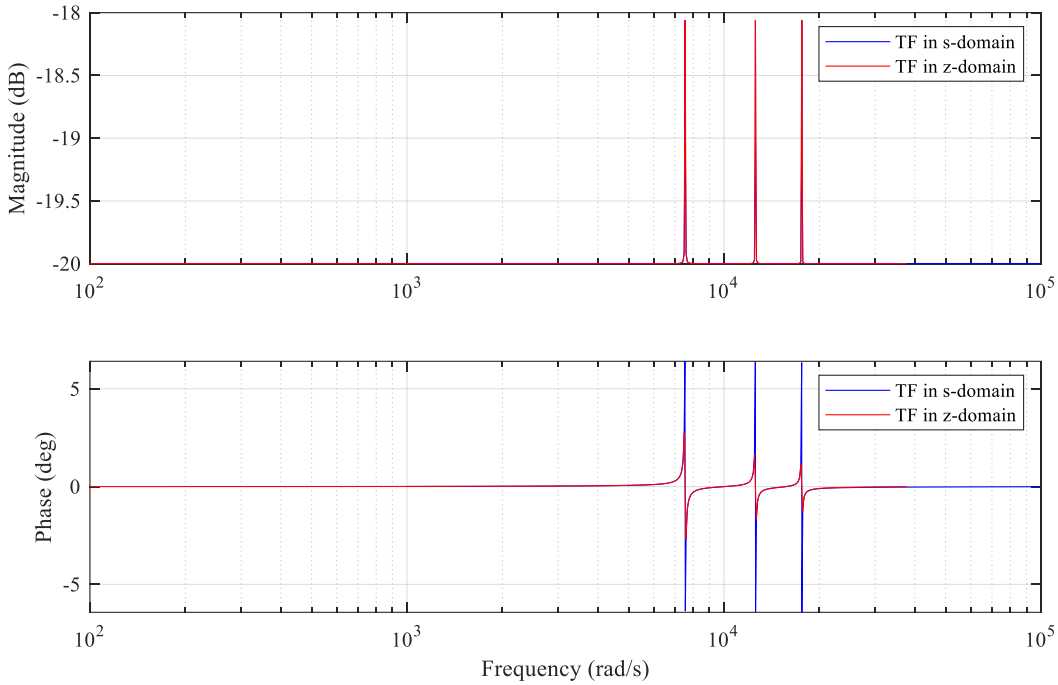

Figure 34: Frequency response plot of the inner current controller transfer function in s- domain vs in z-domain.

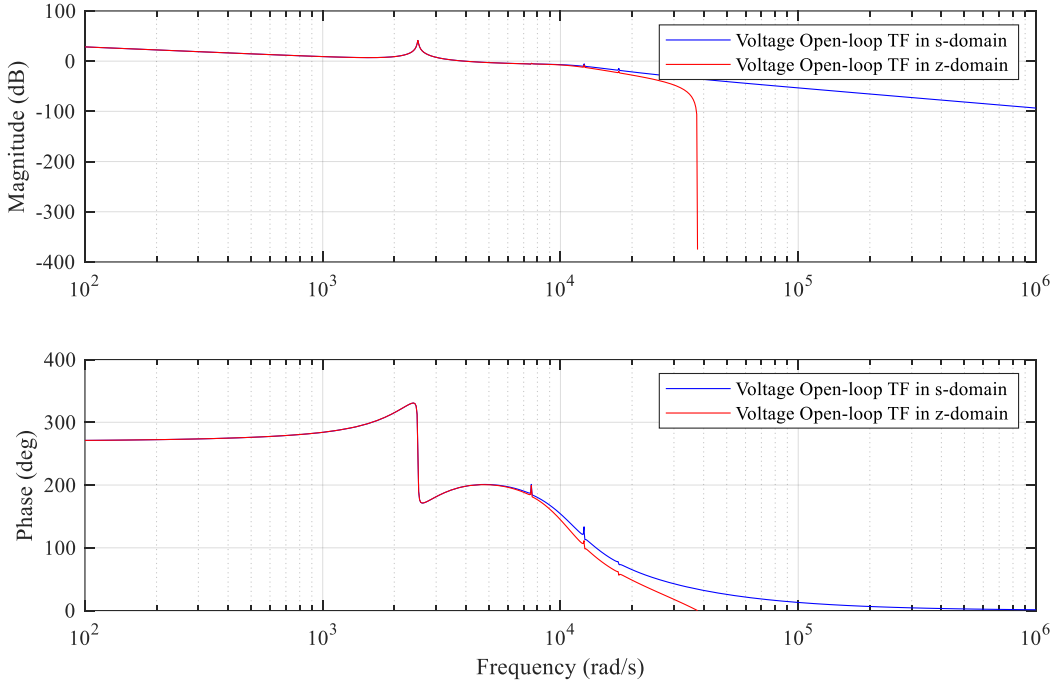

Figure 35: Control system open-loop transfer function in s-domain vs in z-domain.

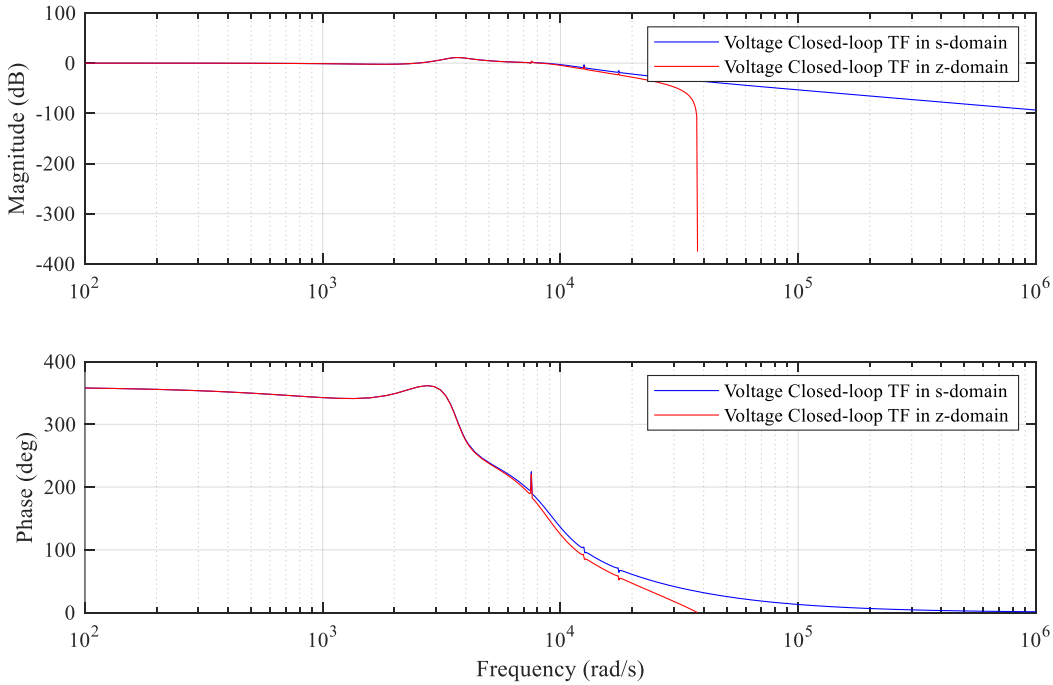

Figure 36: Control system closed-loop transfer function: s-domain vs z-domain.

Chapter Four

4. Simulation Results

This chapter covers the comprehensive simulation studies conducted to validate the proposed system design. It presents the results of system performance under various load conditions, including linear, non-linear, and unbalanced loads. The chapter also includes analyses in both continuous and discrete time domains, demonstrating the robustness of the control system. Finally, the chapter concludes with the sizing of the system dc-link capacitor.

4.1 S and Z Domain Simulation Results

The comparison of the Bode plots in Figures 35 and 36 in the previous chapter demonstrate the capability of both the s-domain and z-domain control systems to track the reference signal at a load power factor of 1. This validates the correctness of the conversion from the s-domain to the z-domain using the Tustin method. However, a closer examination as seen in Figures 37 and 38 reveals that the s-domain control system exhibits a smaller steady-state error in tracking both the magnitude and phase of the sinusoidal reference waveform, compared to the z-domain control system.

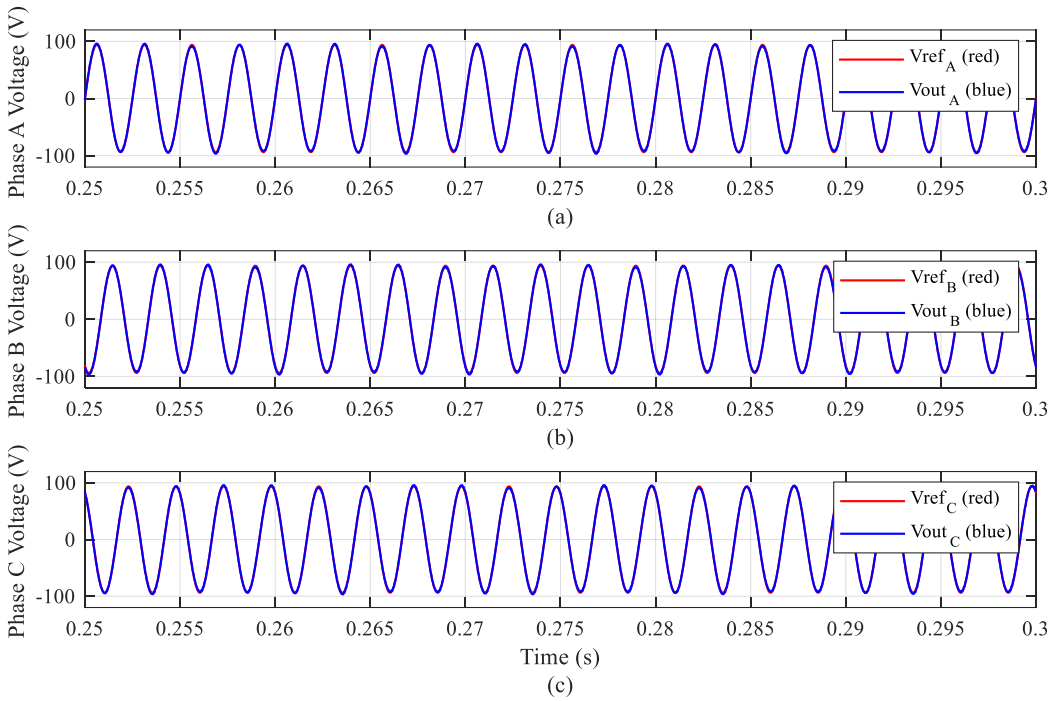

Figure 37: Phase-A continuous time Controller input reference voltage compared with output measured load voltage at PF = 1.

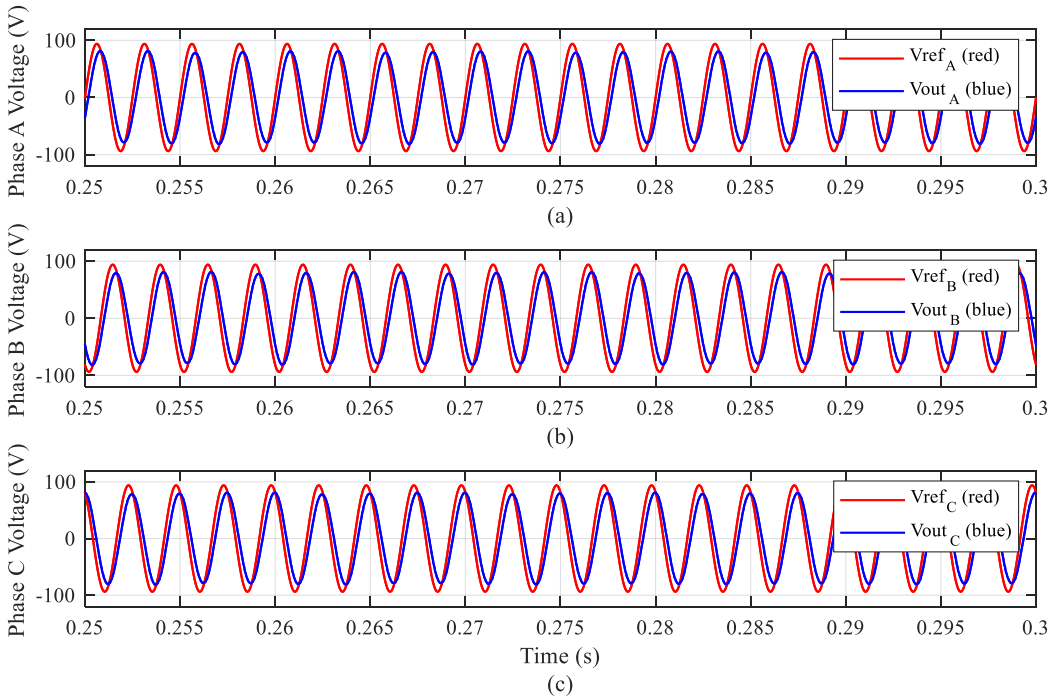

Figure 38: Phase-A discrete time Controller input reference voltage compared with output measured load voltage at PF = 1.

The load output voltage profiles generated by the respective control systems are shown in

Figures 39 and 40. These figures demonstrate that both systems are able to achieve a low total harmonic distortion (THD) at the converter's output. It is worth noting that the systems exhibit a high initial steady-state error, which can be attributed to the introduced delay. This delay is meant to represent the real-world delays encountered in digital signal processing when generating the gate signals for these systems. However, over time, the systems are able to attenuate this error until, after a brief period, they have caught up with the reference signal and begin to accurately track it.

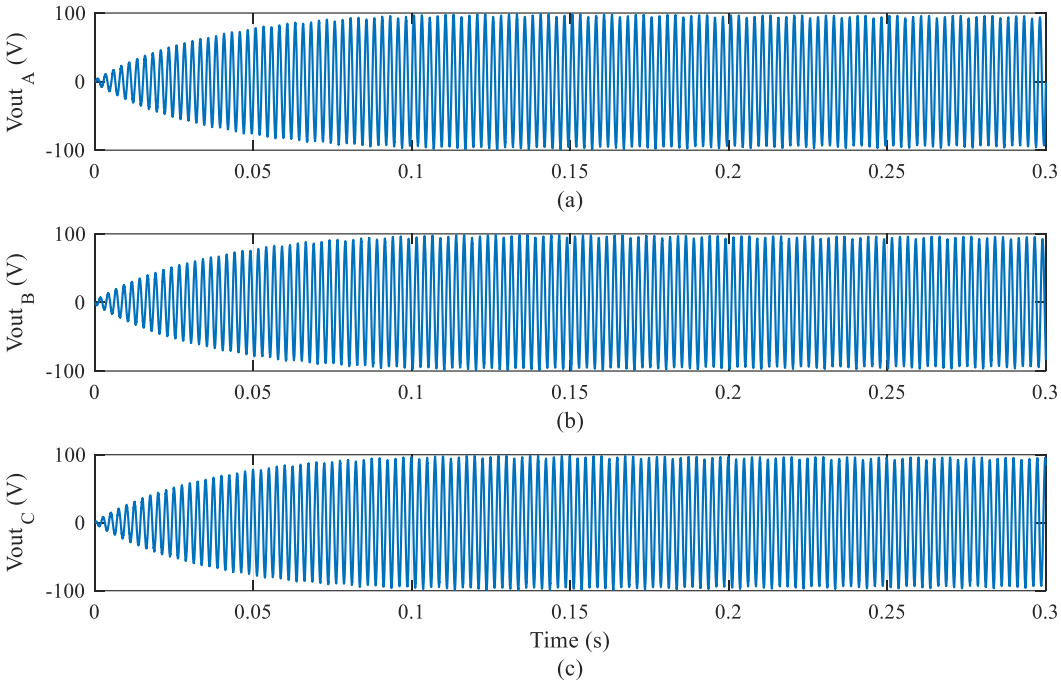

Figure 39: Output Voltage at PF of 1 using s-domain controllers.

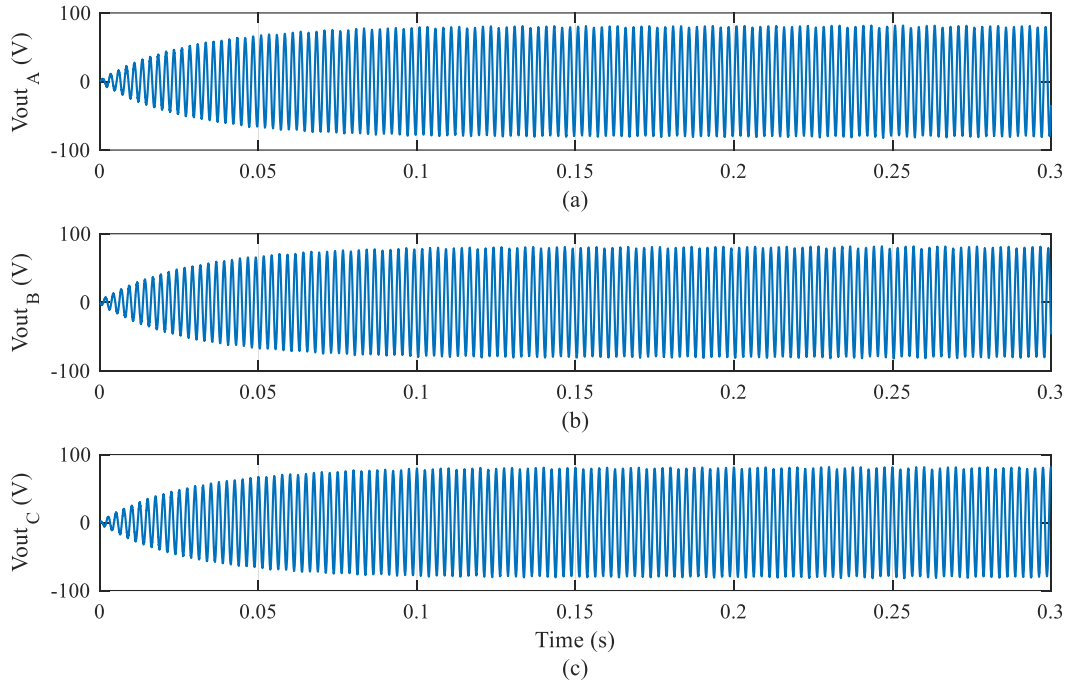

Figure 40: Output Voltage at PF of 1 using z-domain controllers.

The tracking ability of z-domain control systems differs from that of s-domain control systems.

Figure 41 depicts phase shift pulse width modulation in the s-domain, where the reference signal being compared to the four triangle carriers is continuous. In contrast, Figure 42 shows the reference signal in the z-domain, which is discretized using a zero-order hold. This discretization leads to a loss of information about the reference signal and the introduction of harmonics, resulting in a larger steady-state error compared to the continuous system. Additionally, if the reference signal is a sine wave, the discrete control system may not track the same reference signal as before sampling.

When designing a z-domain control system, it is crucial to choose an appropriate sampling period to avoid aliasing and ensure that the loss of information from the analogue signal is not excessive, allowing for proper tracking. Failure to do so can compromise the tracking ability of the z-domain control system compared to its s-domain counterpart.

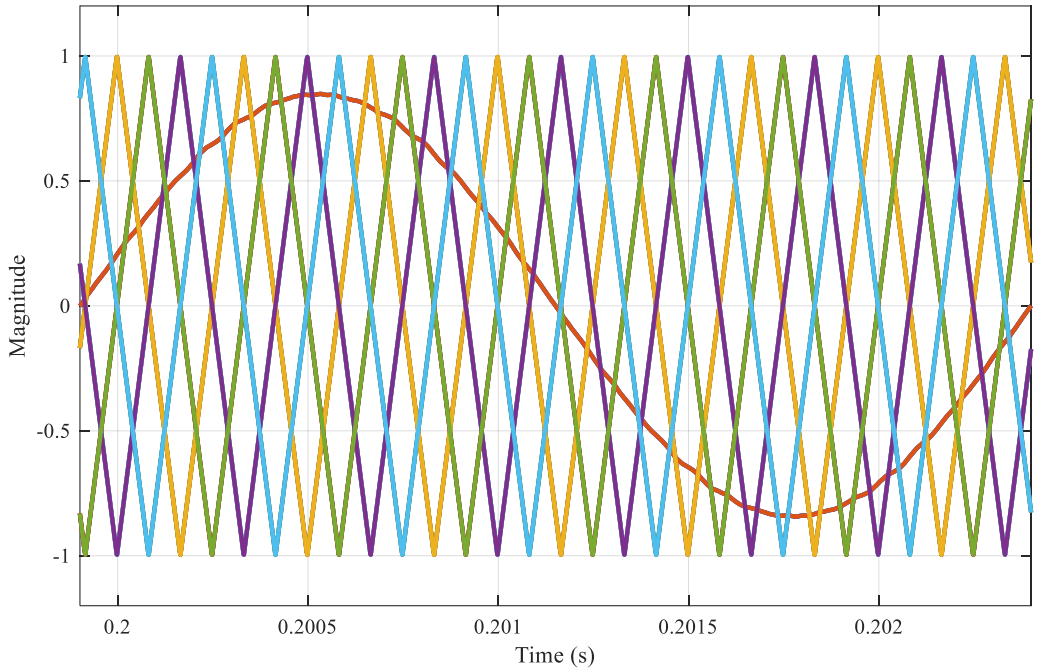

Figure 41: Continuous time Phase shifted PWM.

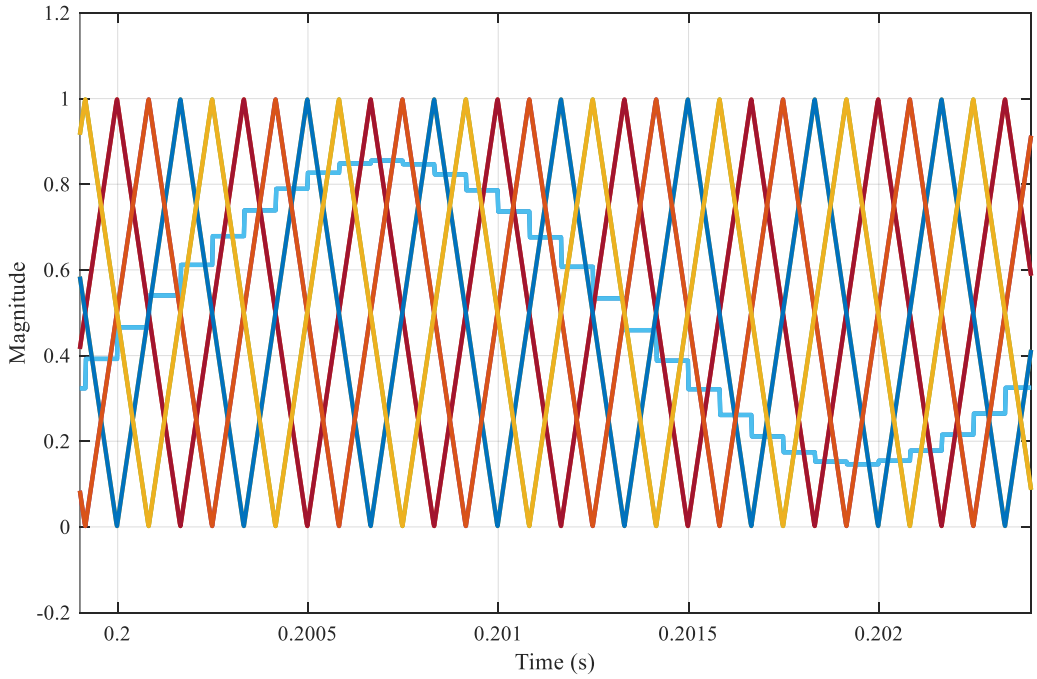

Figure 42: Digital Phase shifted PWM.

The converter topology has an efficiency of 92%, as shown in Figure 43, which can be

approximated to 0.88 when accounting for the calculated total harmonic distortion (THD) of 1.47% (as detailed in Tables 8 and 9). Despite this reduction, overall efficiency remains within acceptable standards. This indicates that the system design, encompassing the control system, converter, transformer, and filter, is able to effectively suppress harmonics, thereby improving overall efficiency.

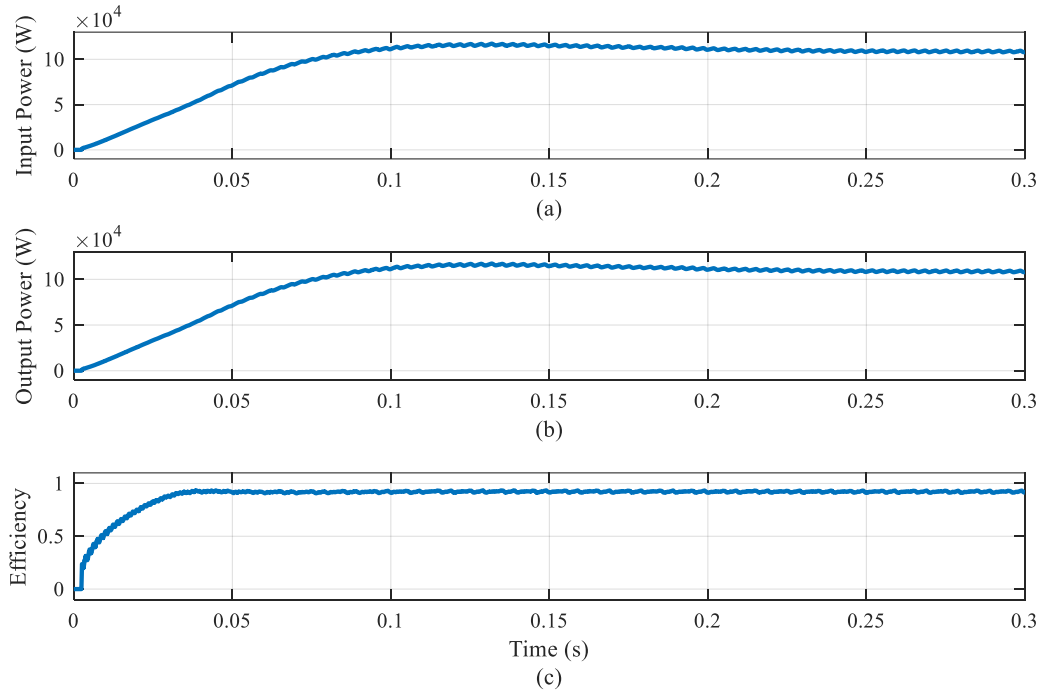

Figure 43: Input power, Output power and efficiency at a PF = 1 and load rating of 100KVA.

Table 8: Output voltage for inductive linear loads at a rating of 100KVA using s-domain controllers.

Phase-A			**Phase-B**			**Phase-C**			**Power Factor (PF)**
Voltage peak (V)	Angle (degrees)	THD (%)	Voltage peak (V)	Angle (degrees)	THD (%)	Voltage peak (V)	Angle (degrees)	THD (%)	
94.92	0.2	1.42	94.25	240.2	1.47	94.25	120.2	1.47	1.0
94.37	-0.1	1.61	94.38	239.9	1.59	94.38	119.9	1.60	0.8

Table 9: Output voltage for inductive linear loads at a rating of 100KVA using z-domain controllers.

Phase-A			**Phase-B**			**Phase-C**			**Power Factor (PF)**
Voltage peak (V)	Angle (degrees)	THD (%)	Voltage peak (V)	Angle (degrees)	THD (%)	Voltage peak (V)	Angle (degrees)	THD (%)	
80.03	-25.7	1.24	80.03	214.3	1.24	80.03	94.3	1.25	1.0
73.98	-26.3	2.52	73.98	213.7	2.52	73.98	93.7	2.51	0.8

The introduced simulation results in Tables 8 and 9 show a clear difference in performance between the s-domain and z-domain control systems under linear loads. The s-domain controller produces stable peak voltages close to the reference (94.25-94.92 V) with low THD (1.42%-1.61%) and minimal phase shift, effectively tracking the reference signal. In contrast, the z-domain controller, implemented using the Tustin method, exhibits lower peak voltages (73.98-80.03 V), larger phase shifts (~25°), and increased THD, particularly in the z-domain simulation where it rises to 2.52%. These differences highlight the z-domain controller's reduced tracking accuracy and higher harmonic distortion, as proved in Table 9.

The results comparing the performance of s-domain and z-domain control systems under unbalanced load conditions, as shown in Tables 10 and 11, reveal notable differences. The s-domain controller maintains peak voltages close to the reference across all phases, with Phase A at 94.34 V, Phase B at 94.43 V, and Phase C at 94.19 V. Additionally, the total harmonic distortion (THD) remains low, ranging from 1.53% to 1.96%, demonstrating the controller's ability to effectively manage unbalanced loads while maintaining good tracking accuracy and minimal distortion.

In contrast, the z-domain controller, while functional, exhibits reduced performance. The peak voltages are significantly lower, with Phase A at 77.58 V, Phase B at 74.54 V, and Phase C at 75.68 V, indicating a diminished ability to accurately track the reference signal. Furthermore, the z-domain controller experiences higher THD, particularly in Phase B, where it reaches 2.49%, compared to the s-domain system's maximum of 1.96%. This increase in harmonic distortion and the reduction in voltage magnitude suggest that the discretization process inherent to the z-domain system introduces additional errors, which become more pronounced under unbalanced load conditions.

Table 10: Output Voltage for Unbalanced Loads using s-domain controllers.

Phase	**Voltage peak (V)**	**Angle (degrees)**	**THD (%)**	**LOAD(Ω)**
A	94.34	0.2	1.53	0.13225
B	94.43	240.0	1.87	$0.13225 + j0.09919$
C	94.19	120.1	1.96	$0.13225 + j0.09919$

Table 11: Output Voltage for Unbalanced Loads using z-domain controllers,

Phase	**Voltage peak (V)**	**Angle (degrees)**	**THD (%)**	**LOAD(Ω)**
A	77.58	-26.0	1.86	0.13225
B	74.54	213.6	2.49	$0.13225 + j0.09919$
C	75.68	95.8	1.87	$0.13225 + j0.09919$

The results comparing the s-domain and z-domain control systems under non-linear load conditions, as shown in Tables 12 and 13, highlight important performance differences across varying power ratings.

The non-linear load used in this simulation consists of a three-phase rectifier connected to an LC filter and a resistive load. For the s-domain control system, shown in Table 12, the voltage peaks across all phases remain nearly constant, around 93.94 V, for power ratings ranging from 2000 W to 4668 W. However, the total harmonic distortion (THD) is highly dependent on the power rating. At the highest power rating of 4668 W, the THD reaches 8.82%, which gradually decreases as the power rating is reduced, with a THD of 4.61% at 2000 W. This suggests that while the s-domain controller maintains consistent voltage magnitude, it experiences increasing harmonic distortion as the load increases, likely due to the non-linear characteristics of the load interacting with the continuous control system.

In contrast, the z-domain control system, as detailed in Table 13, shows lower voltage magnitudes across all phases, with peaks around 75.67-75.78 V. This is significantly lower than the s-domain values and suggests reduced tracking accuracy of the reference signal. The z-domain system also demonstrates similar trends in THD as the s-domain system, where higher power ratings result in greater distortion. For instance, at 5500 W, the THD is around 9.35%, while at 2000 W, the THD drops to 2.61%. While the THD values at lower power ratings are comparable to those in the s-domain system, the z-domain controller shows higher distortion at peak power levels.

Table 12: Output voltage for non-linear loads at different power rating using s-domain controllers.

Phase-A			**Phase-B**			**Phase-C**			**Power Rating (W)**
Voltage peak (V)	Angle (degrees)	THD (%)	Voltage peak (V)	Angle (degrees)	THD (%)	Voltage peak (V)	Angle (degrees)	THD (%)	
93.96	0.0	8.82	93.96	240.0	8.79	93.96	120.0	8.81	4668
93.94	0.0	6.57	93.95	240.0	6.58	93.95	120.0	6.57	3277
93.94	0.0	5.44	93.95	240.0	5.41	93.94	120.0	5.43	2500
93.93	0.0	4.61	93.93	240.0	4.61	93.93	120.0	4.61	2000

Table 13: Output voltage for non-linear loads at different power rating using z-domain controllers.

Phase-A			**Phase-B**			**Phase-C**			**Power Rating (W)**
Voltage peak (V)	Angle (degrees)	THD (%)	Voltage peak (V)	Angle (degrees)	THD (%)	Voltage peak (V)	Angle (degrees)	THD (%)	
75.78	-20.0	9.35	75.77	220.0	9.41	75.77	100.0	9.44	5500
75.70	-19.9	5.42	75.70	220.1	5.47	75.70	100.1	5.46	3690
75.67	-19.8	4.08	75.67	220.2	4.09	75.67	100.2	4.08	3000
75.67	-19.7	2.61	75.68	220.3	2.61	75.67	100.3	2.58	2000

Table 14 shows the voltage variations of the DC-link capacitor for different inductive linear loads at a 100 kVA rating. As the power factor decreases from 1.0 to 0.0, the maximum voltage remains relatively constant, but the minimum voltage increases, resulting in lower voltage ripple. The average voltage also increases, from 551.6 V at PF = 1.0 to 561.3 V at PF = 0.0.

Table 14: Voltage variations of DC-link Capacitor for different inductive linear loads at a rating of 100KVA.

Maximum Voltage (V)	**Minimum Voltage (V)**	**Average Voltage (V)**	**Ripple** (ΔV)	**Percent Ripple (%)**	**Power Factor (PF)**
561.5700	539.5000	551.6000	22.0700	4.0	1.0
561.6640	543.0000	553.1000	18.6640	3.4	0.8
561.7075	547.0000	554.9000	14.7075	2.7	0.6
561.7834	551.1800	556.8000	10.6034	1.9	0.4
561.8850	555.7280	558.9000	6.1570	1.1	0.2
561.9440	560.6300	561.3000	1.3140	0.2	0.0

The voltage ripple, measured as the difference between maximum and minimum voltages, decreases significantly from 22.07 V (4.0% of the average) at PF = 1.0 to just 1.314 V (0.2% of the average) at PF = 0.0. These trends indicate that as the power factor decreases, the DC-link capacitor experiences more stable voltage levels and reduced voltage stress, which can improve system performance and reliability.

4.2 Sizing of Dc-link Capacitor

Using the equation obtained in [52] and in [53] which is shown below:

$$C_{dc} = \frac{S}{2\omega_g V_{dc} \Delta V_{dc}} \tag{4.1}$$

Where V_{dc} is the dc-link maximum voltage, ω_g is the fundamental frequency of operation (in our 400Hz) in rad/s and ΔV_{dc} is the dc bus voltage ripple.

Based on this equation, the calculation resulted in a 1.311 mF capacitor for a target 5% ripple and a maximum DC-link voltage of 551 V. Limiting the ripple to 5% is crucial, as a larger ripple can introduce low-order harmonics that the controller and filter may not be able to suppress, potentially destabilizing the system and degrading performance.

However, the simulation used a much larger 20 mF capacitor. This significant discrepancy can be attributed to the substantial ripple introduced by the switching of the 24 cascaded half-bridge (HB) switches at 3 kHz, as well as the inherent ripple of the 6-pulse rectifier circuit supplying the DC bus. These switching and rectifier-induced ripples necessitated the use of a larger 20 mF capacitor to maintain the desired 5% voltage ripple target, despite the analytical calculation suggesting a 1.311 mF capacitor would be sufficient. The results of the voltage ripple variation with changing load using the 20mF capacitor are shown in Table 14.

Chapter Five

5. Conclusion and Future Work

5.1 Conclusion

The conclusion of this thesis presents a comprehensive analysis and design of a 400 Hz output converter specifically tailored for naval applications. This research has made substantial progress in addressing the unique challenges posed by naval power systems, particularly in terms of efficiency, reliability, and performance under varying load conditions.

Key contributions of this research include:

1. **Optimal Converter Topology:** After a comprehensive comparison among potential topologies in the literature review capable of meeting naval power system standards and specifications, a 5-level cascaded converter topology was selected. Subsequent analysis and simulations proved its potential to achieve superior performance in naval applications. This topology demonstrated its ability to deliver multiple voltage levels and maintain a high overall carrier frequency while operating at a low switching frequency. The results confirmed its efficacy in meeting the stringent requirements of maritime environments, including voltage quality, efficiency, and reliability under various load conditions.

2. **Advanced Control Strategy:** Through rigorous analysis, the research developed an innovative control strategy combining a Proportional Resonant (PR) and Proportional (P) controller. This approach simplifies implementation while maintaining the effectiveness of more complex cascaded control strategies, balancing performance with practicality.

3. **Harmonics Suppression Technique:** The study developed an effective harmonic suppression method combining PR and P control strategies with optimized LC filter design. This approach successfully mitigates both low-order and high-order harmonics, achieving low Total Harmonic Distortion (THD) in the output voltage across various load conditions, thus meeting stringent naval power quality standards.

4. **System Validation and Performance:** Extensive simulations using MATLAB Simulink validated the system's performance. The converter consistently delivered a 400 Hz output

voltage with low Total Harmonic Distortion (THD) across various challenging scenarios, including linear, unbalanced, and non-linear loads. The system accurately tracked the required voltage amplitude with appropriate phase angles, even accounting for digital control delays.

5. **Practical Implementation Considerations:** The research extended beyond theoretical design by conducting comparative analyses of S-domain and Z-domain controller implementations, providing insights into their respective performances. Additionally, the study included preliminary sizing calculations for critical system components such as dc-link capacitor. These considerations provide a foundation for future practical implementation of the proposed converter system in naval applications.

5.2 Future Work

This thesis centered on the design of a 400 Hz output converter for naval applications, utilizing a 5-level cascaded H-bridge topology. After evaluating multiple control strategies, a combination of proportional-resonant (PR) and proportional (P) controllers was selected for its simplicity and effectiveness. Simulations demonstrated that the system achieved stable output voltage with low total harmonic distortion (THD), even under various load conditions and digital control delays.

However, while this thesis successfully achieved its objectives, there are several areas where further research and development could enhance both the performance and practicality of the system for naval and similar applications.

Potential Future Work:

1. **Exploration of Hybrid ANPC Topology:** A promising direction for future research is investigating a hybrid Active Neutral Point Clamped (ANPC) converter. This topology combines silicon (Si) IGBTs, which switch at fundamental frequencies, and silicon carbide (SiC) MOSFETs, which operate at higher carrier frequencies. The hybrid configuration could significantly enhance power density, reduce switching losses, and improve the overall efficiency of the system. Furthermore, as an active NPC topology, it has the potential to balance switching losses among the devices, addressing a key issue in conventional NPC converters. Future work should also focus on optimizing the modulation technique, such as developing a carrier-based method to balance the computational complexity while ensuring stable DC-link capacitor voltage levels.

2. **Design of Front-End Topology**: This thesis primarily addressed the back-end system of the converter. Future research should focus on the design of a more advanced front-end system. In the current work, a 6-pulse rectifier was used, which resulted in a larger DC capacitor size. Future efforts could explore the use of active rectifiers to minimize

the required capacitor size and improve overall system efficiency. Active rectifiers would not only optimize the power factor but also reduce harmonic distortion, making them suitable for naval applications requiring compact and efficient designs.

3. **Advanced Control Strategies for Improved Performance**: Although the PR-P control structure proved effective, future research could investigate more advanced control algorithms, such as model predictive control (MPC) or adaptive control techniques, which might offer enhanced robustness, particularly in dynamic and uncertain operational environments. These strategies could be especially useful in dealing with more complex load conditions, further reducing THD and improving system response times under fluctuating naval operational conditions.

4. **Experimental Validation and Real-World Testing**: To complement the simulation results achieved in this thesis, future work should include experimental validation of the proposed converter topology and control strategy. Prototyping and real-world testing would provide insights into the practical challenges of implementing the design in naval applications, such as heat dissipation, electromagnetic interference (EMI), and long-term reliability under harsh operating conditions. This step would bridge the gap between theoretical design and practical application, ensuring the system meets the necessary standards for naval use.

References

[1] Igor. Kuzle, Tomislav. Capuder, and Hrvoje. Pandžić, *ENERGYCON 2014 : 13-16 May 2014, Dubrovnik, Croatia*. IEEE, 2014.

[2] *SPEEDAM 2014 : International Symposium on Power Electronics, Electrical Drives, Automation and Motion : Ischia (Italy), 18th-20th June 2014*. IEEE, 2014.

[3] "DEPARTMENT OF DEFENSE INTERFACE STANDARD SECTION 300B," 1992. [Online]. Available: http://www.assistdocs.com

[4] *2020 IEEE 29th International Symposium on Industrial Electronics (ISIE) : proceedings : 17-19 June, 2020, Delft, Netherlands*. IEEE, 2020.

[5] Y. G. Lv, G. P. Zhang, Q. W. Wang, and W. X. Chu, "Thermal Management Technologies Used for High Heat Flux Automobiles and Aircraft: A Review," Nov. 01, 2022, *MDPI*. doi: 10.3390/en15218316.

[6] H. Ka, "Study on Electromagnetic Interference (EMI) and Electromagnetic compatibility (EMC): Sources and Design Concept for Mitigation of EMI/EMC," *Journal of Liberal Arts and Humanities (JLAH) Issue*, vol. 4, no. 8, pp. 68–96, 2023, doi: 10.48150/jlah.v4no8.2023.a3.

[7] E. Wernekinck, A. Kawamura, and R. Hoft, "A HIGH FREQUENCY Ac/DC CONVERTER WITH UNITY POWER FACTOR AND MINIMUM HARMONIC DISTORTION."

[8] A. Nabae, I. Takahashi, and H. Akagi, "A New Neutral-Point-Clamped PWM Inverter."

[9] A. G. Easi, "SIMULATION AND IMPLEMENTATION OF TWO-LEVEL AND THREE-LEVEL INVERTERS BY MATLAB AND RT-LAB," 2011, doi: 10.13140/RG.2.2.35370.72649.

[10] *EMC 2011 : 2011 IEEE International Symposium on Electromagnetic Compatibility : proceedings : Long Beach, Ca August 14-91 2011*. IEEE, 2011.

[11] S. Bernet, "Recent Developments of High Power Converters for Industry and Traction Applications," 2000.

[12] T. Brückner, S. Bernet, and H. Güldner, "The active NPC converter and its loss-balancing control," *IEEE Transactions on Industrial Electronics*, vol. 52, no. 3, pp. 855–868, Jun. 2005, doi: 10.1109/TIE.2005.847586.

[13] *2015 IEEE 10th Conference on Industrial Electronics and Applications : 5-17 June 2015, Auckland, New Zealand*. Institute of Electrical and Electronics Engineers, 2015.

[14] T. Brückner, S. Bernet, and P. K. Steimer, "Feedforward loss control of three-level active NPC converters," *IEEE Trans Ind Appl*, vol. 43, no. 6, pp. 1588–1596, Nov. 2007, doi: 10.1109/TIA.2007.908164.

[15] N. Celanovic and D. Boroyevich, "A Comprehensive Study of Neutral-Point Voltage Balancing Problem in Three-Level Neutral-Point-Clamped Voltage Source PWM Inverters," 2000.

[16] S. Busquets-Monge, J. Bordonau, D. Boroyevich, and S. Somavilla, "The nearest three virtual space vector PWM - A modulation for the comprehensive neutral-point balancing in the three-level NPC inverter," Mar. 2004. doi: 10.1109/LPEL.2004.828445.

[17] S. Busquets Monge, S. Somavilla, J. Bordonau, and D. Boroyevich, "Capacitor voltage balance for the neutral-point-clamped converter using the virtual space vector concept with optimized spectral performance," *IEEE Trans Power Electron*, vol. 22, no. 4, pp. 1128–1135, Jul. 2007, doi: 10.1109/TPEL.2007.900547.

[18] J. Pou, R. Pindado, D. Boroyevich, and P. Rodríguez, "Evaluation of the low-frequency neutral-point voltage oscillations in the three-level inverter," *IEEE Transactions on Industrial*

Electronics, vol. 52, no. 6, pp. 1582–1588, Dec. 2005, doi: 10.1109/TIE.2005.858723.
[19] A. Anthon, Z. Zhang, M. A. E. Andersen, D. G. Holmes, B. McGrath, and C. A. Teixeira, "The benefits of SiC mosfets in a T-type inverter for grid-tie applications," *IEEE Trans Power Electron*, vol. 32, no. 4, pp. 2808–2821, Apr. 2017, doi: 10.1109/TPEL.2016.2582344.
[20] C. Schöner, A. Hensel, J. Carlos, and Z. Cambero, "Investigation of 3-Level-Topology MNPC for Aerospace Applications with SiC-MOSFET-based Power Modules."
[21] *2015 IEEE 10th Conference on Industrial Electronics and Applications : 5-17 June 2015, Auckland, New Zealand*. Institute of Electrical and Electronics Engineers, 2015.
[22] Q. X. Guan *et al.*, "An Extremely High Efficient Three-Level Active Neutral-Point-Clamped Converter Comprising SiC and Si Hybrid Power Stages," *IEEE Trans Power Electron*, vol. 33, no. 10, pp. 8341–8352, Oct. 2018, doi: 10.1109/TPEL.2017.2784821.
[23] M. Tooley and D. Wyatt, "Aircraft Electrical and Electronic Systems: Principles, operation and maintenance."
[24] H. Ebrahimi, J. R. Gatabi, and H. El-Kishky, "An auxiliary power unit for advanced aircraft electric power systems," *Electric Power Systems Research*, vol. 119, pp. 393–406, 2015, doi: 10.1016/j.epsr.2014.10.023.
[25] *APEC 2014 : twenty-ninth annual Applied Power Electronics Conference and Exposition, March 16-20, 2014, Fort Worth, Texas*. IEEE, 2014.
[26] *2020 11th Power Electronics, Drive Systems, and Technologies Conference (PEDSTC)*. IEEE, 2020.
[27] X. Wang, P. C. Loh, and F. Blaabjerg, "Stability Analysis and Controller Synthesis for Single-Loop Voltage-Controlled VSIs," *IEEE Trans Power Electron*, vol. 32, no. 9, pp. 7394–7404, Sep. 2017, doi: 10.1109/TPEL.2016.2632065.
[28] P. C. Loh and D. G. Holmes, "Analysis of multiloop control strategies for LC/CL/LCL-filtered voltage-source and current-source inverters," *IEEE Trans Ind Appl*, vol. 41, no. 2, pp. 644–654, Mar. 2005, doi: 10.1109/TIA.2005.844860.
[29] C. Liu, C. Sun, and W. Hu, "Proportional-Resonant Controller of High Power 400Hz Inverter in Stationary Frame."
[30] . IEEE Staff, *2009 International Conference on Power and Energy Engineering*. I E E E, 2009.
[31] D. Casadei and G. Serra, "THE USE OF MATRIX CONVERTERS IN DIRECT TORQUE CONTROL OF INDUCTION MACHINES."
[32] "Control Design of a Three-Phase Matrix Converter Mobile AC Power Supply Using Genetic Algorithms." [Online]. Available: http://www.eee.nottingham.ac.uk
[33] "Improved_Indirect_3D_SVM_for_Repetitive_Controlled_Four-Leg_Matrix_Converter (1)".
[34] R. Cárdenas, R. Peña, J. Clare, P. Wheeler, and P. Zanchetta, "A repetitive control system for four-leg matrix converters feeding non-linear loads," *Electric Power Systems Research*, vol. 104, pp. 18–27, 2013, doi: 10.1016/j.epsr.2013.05.012.
[35] M. P. Kazmierkowski and L. Malesani, "Current Control Techniques for Three-Phase Voltage-Source PWM Converters: A Survey," 1998.
[36] C. D. Schauder and R. Caddy, "CURRENT CONTROL OF VOLTAGE SOURCE INVERTERS FOR FAST FOUR-QUADRANT DRIVE PERFORMANCE."
[37] T. M. Rowan and R. J. Kerkman, "A New Synchronous Current Regulator and an Analysis of Current-Regulated PWM Inverters."
[38] H. Nagase, Y. Matsuda, K. Ohnishi, H. Ninomiya, and T. Koike, "High-Performance Induction Motor Drive System Using a PWM Inverter."
[39] D. M. Brod and D. W. Novotny, "Current Control of VSI-PWM Inverters," 1985.
[40] D. N. Zmood and D. G. Holmes, "Stationary frame current regulation of PWM inverters with zero steady-state error," *IEEE Trans Power Electron*, vol. 18, no. 3, pp. 814–822, May 2003, doi: 10.1109/TPEL.2003.810852.
[41] Y.-Y. Tzou, I. Member, R.-S. Ou, S.-L. Jung, and M.-Y. Chang, "High-Performance Programmable AC Power Source with Low Harmonic Distortion Using DSP-Based Repetitive

Control Technique," 1997.
[42] U. Borup, P. N. Enjeti, F. Blaabjerg, and S. Member, "A New Space-Vector-Based Control Method for UPS Systems Powering Nonlinear and Unbalanced Loads."
[43] * C Chiareui, Ualcuni, S. Pirondini, and Tomasin, "SINGLE-PHASE, THREELEVEL, CONSTANT FREQUENCY CURRENT HYSTERESIS CONTROL FOR UPS APPLICATIONS (')."
[44] S. Buso, S. Fasolo, and P. Mattavelli, "Uninterruptible Power Supply Multiloop Control Employing Digital Predictive Voltage and Current Regulators."
[45] J.-S. Cho, S.-Y. Lee, H.-S. Mok, and G.-H. Choe, "Modified Deadbeat Digital Controller for UPS with 3-Phase PWM Inverter."
[46] M. J. Ryan, R. W. De Doncker, and R. D. Lorenz, "Decoupled Control of a Four-Leg Inverter via a New 4 4 Transformation Matrix," 2001.
[47] M. J. Ryan, W. E. Brumsickle, and R. D. Lorenz, "Control Topology Options for Single-Phase UPS Inverters."
[48] N. M. Abdel-Rahim and J. E. Quaicoe, "Analysis and Design of a Multiple Feedback Loop Control Strategy for Single-phase Voltage-S ource TJPS Inverters," 1996.
[49] P. C. Loh and D. G. Holmes, "Analysis of multiloop control strategies for LC/CL/LCL-filtered voltage-source and current-source inverters," *IEEE Trans Ind Appl*, vol. 41, no. 2, pp. 644–654, Mar. 2005, doi: 10.1109/TIA.2005.844860.
[50] L. Chun-Xi, M. Wei-Ming, S. Chi, and H. Wen-Hua, "Research on harmonics suppression in high power middle frequency 400Hz inverter," in *Asia-Pacific Power and Energy Engineering Conference, APPEEC*, 2009. doi: 10.1109/APPEEC.2009.4918690.
[51] "Advanced Textbooks in Control and Signal Processing Power Electronic Converters Modeling and Control Seddik Bacha Iulian Munteanu Antoneta Iuliana Bratcu with Case Studies." [Online]. Available: http://www.springer.com/series/4045
[52] M. A. Memon, "Sizing of dc-link capacitor for a grid connected solar photovoltaic inverter," *Indian J Sci Technol*, vol. 13, no. 22, pp. 2272–2281, Jun. 2020, doi: 10.17485/IJST/v13i22.406.
[53] H. L. Jou, K. Der Wu, J. C. Wu, S. H. Wei, and T. Y. Zhang, "Power Converter for 60 Hz-400 Hz Bilateral Power Conversion," *IEEE Trans Aerosp Electron Syst*, vol. 56, no. 6, pp. 4491–4503, Dec. 2020, doi: 10.1109/TAES.2020.2993659.